W.A.WHITNEY
AN ESTERLINE COMPANY

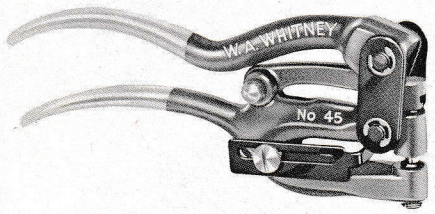

HAND OPERATED PUNCHES AND SHEARS

No. 45 Hand Operated Punch	2
No. 6 Hand Operated Punch	4
No. 1 Hand Operated Punch	5
No. 2 Hand Operated Punch	6
No. 2 Channel Iron Punch	7
Chicago Slitting Shear	7
Slitting Shears	8
Rod Shears	9
No. 91 Series Bench Presses	10
No. 91 Series Tooling	12

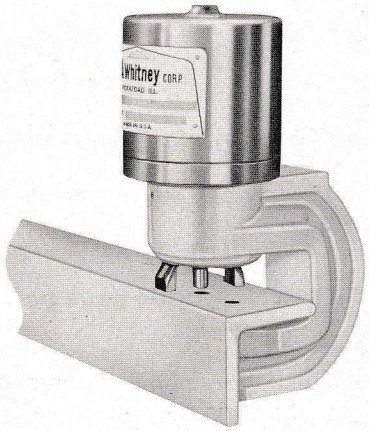

PORTABLE HYDRAULIC PRESSES

Series 700 Flange Presses	20
Series 701 Web Presses	20
Model 700-T-1/2A Power Unit	21
Series 700/701 Tooling	24

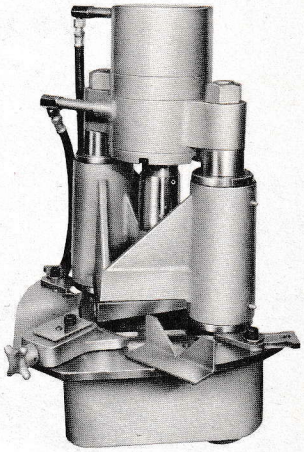

COPER-NOTCHER-BENDER PRESS

Model 610-C Press	26
Model 600-S-3A-6FS Power Unit	28

INDUSTRIAL TOOLS FOR MATERIALS UP THRU ¼" THICK

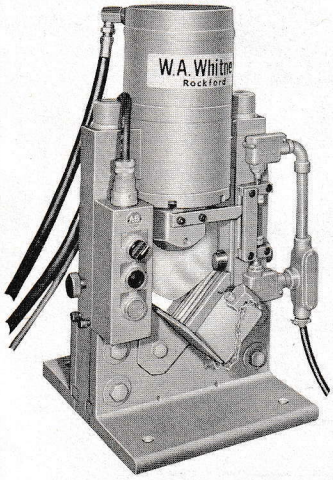

HYDRAULIC SHEAR

Model 606-B Shear	29
Model 600-S-3A-606 Power Unit	30

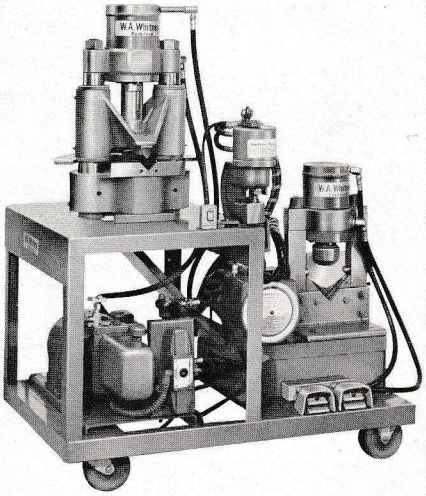

FABRICATING UNITS

1/4" Fab Center	32
Mobile Fabricator	34
Low-Cost Combination Fabricator	37

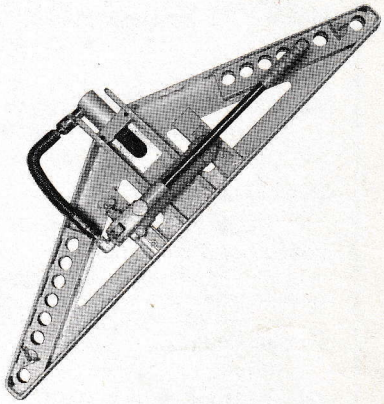

PORTABLE BEAM STRAIGHTENOR

Model 8600 Beam Straightenor	39

CATALOG IT-80

COVER

No. 45 Hand Operated Punch

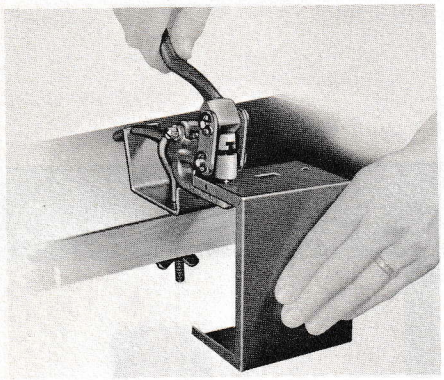

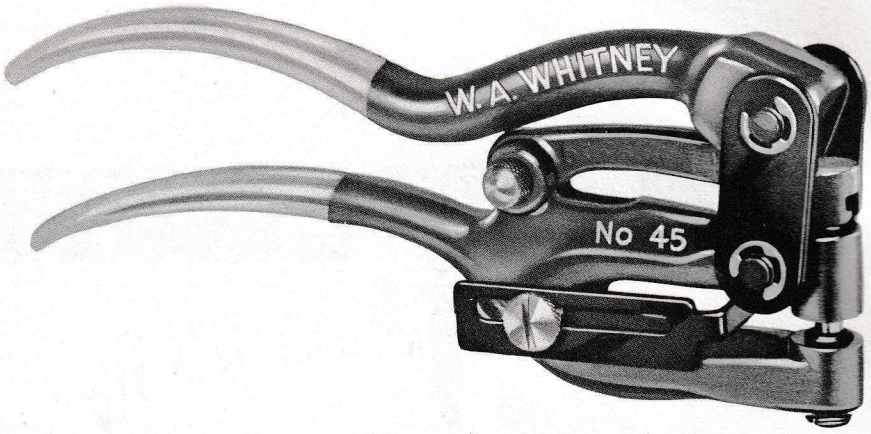

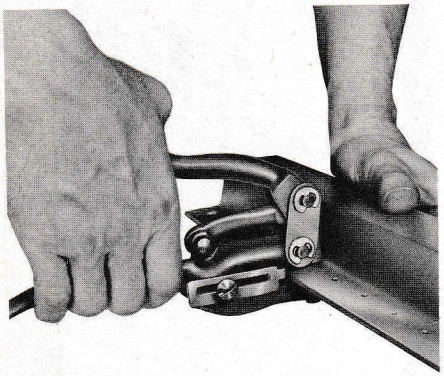

- **Powerful — Lightweight — Compact**
  - **All major parts drop-forged**
  - **Wearing parts heat-treated**
  - **Side gage permits accurate throat depth adjustment**

This highly popular hand punch is lightweight and efficient, durably built and compact, with the power and capacity to meet the majority of sheet metal requirements. Its 1.2 ton punching capacity easily pierces 16 ga. mild steel. Use it for round or irregular shaped punching. Punches and dies are easy to change. An adjustable side gage permits accurate throat depth adjustment to be held.

Capacity.....1.2 ton

Maximum Diameter...9/32" (thru 18 ga. mild steel)

Maximum Thickness.....14 ga. mild steel (3/16 dia. hole)

Throat Depth.....2"

Space Between Punch & Die.....3/16"

Overall Length.....8-1/2"

Weight (tool only).....2-1/2 lbs.

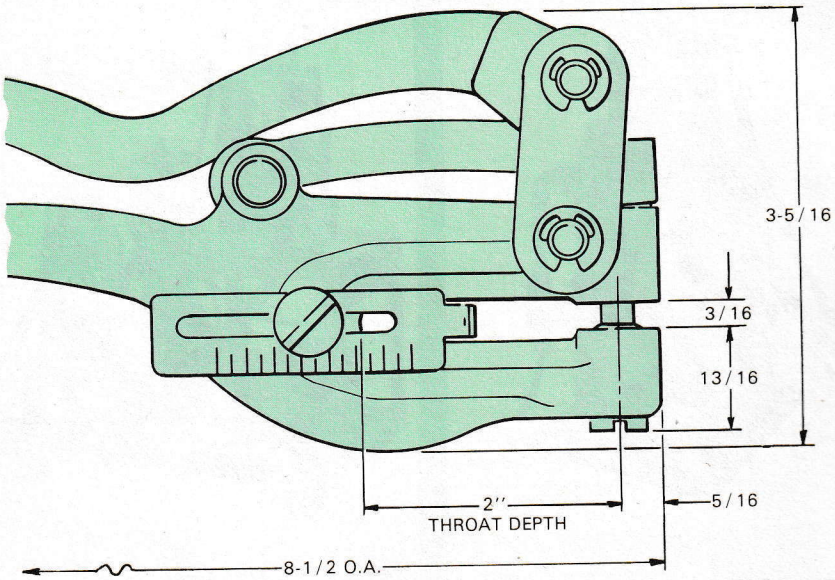

© W.A. Whitney Corp., 1980, All Rights Reserved

INSIDE FRONT COVER

PUNCHES 1/4" DIA. HOLE THRU 16 GA. MILD STEEL

No. 45 PUNCH SET

(004-500)

- High-impact plastic storage box
- 7 punch and die sets
- Die adjusting key for quick die changes

High-impact plastic box provides convenience storage for No. 45 Hand Punch with seven punches and dies in the following sizes: 3/32", 1/8", 5/32", 3/16", 7/32", 1/4" and 9/32". Kit contains a die adjusting key for quick die changes.

No. 4V VISE

- Inexpensive
- Sturdy metal vise
- Converts hand punch to a bench operated tool

Inexpensive vise converts No. 45 Hand Punch to convenient, easy to operate, bench-type tool. Drill one hole through workbench to attach vise. Swivels to any position. Fastens securely with wing nut.

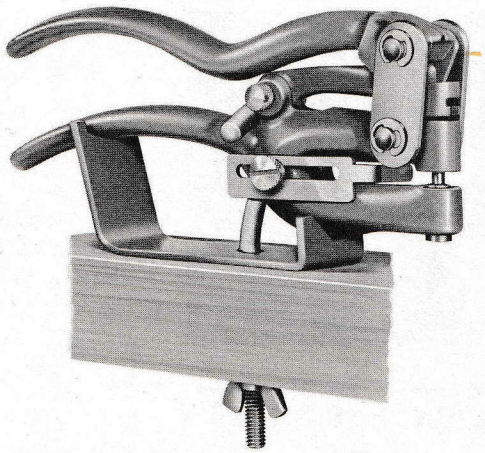

(004-044)

BUTTON PUNCHES AND DIES

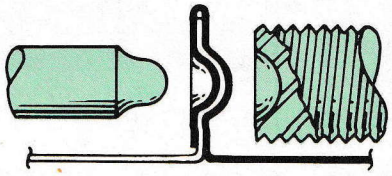

Button punches and dies are used to fasten three or more thicknesses of metal together without punching a hole or using a rivet. Capacity: 3 thicknesses of 22 ga. mild steel.

	No.	Sizes
Punch	1401	1/8", 3/16", 7/32"
Die	1402	

PUNCH STYLE No. 5

DIE STYLE No. 5

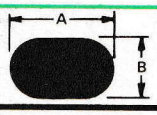

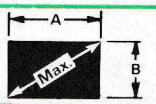

STANDARD STOCK ROUND PUNCH AND DIE SIZES

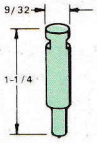

1/16"	3/16"
5/64"	13/64"
3/32"	7/32"
7/64"	15/64"
1/8"	1/4"
9/64"	17/64"
5/32"	9/32"
11/64"	

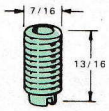

Add 25% for sizes not shown.

OVAL

"A" Max. 9/32"
"B" Max. 1/4"
"B" Min. 1/16"

Double Price when "B" is less than 3/32"

RECTANGLE

Max. across corners 9/32"
"B" Min. 1/16"

Double Price when "B" is less than 3/32"

SQUARE

"A" Min. 1/16" (1/32" Incre.)
"A" Max. 3/16"

Double Price when "A" is 1/16" to 3/32"

Add 25% for sizes other than 1/32" incre.

No. 6 Hand Operated Punch

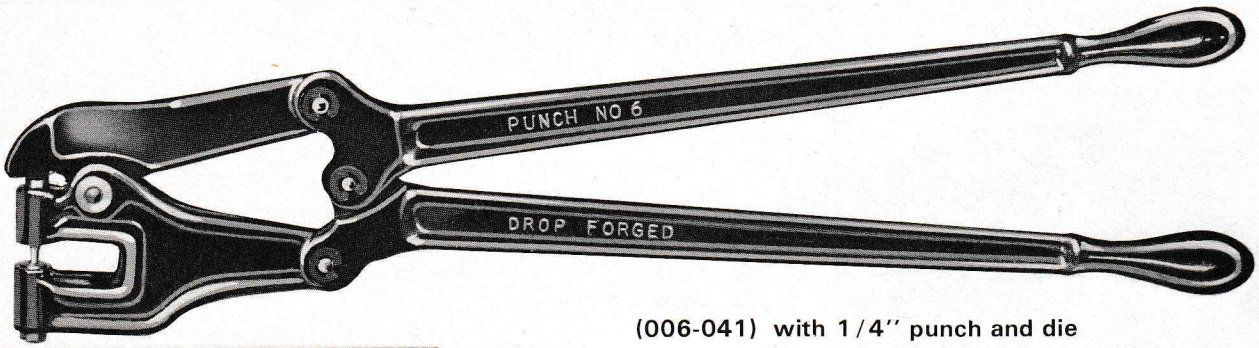

(006-041) with 1/4" punch and die

- 2.7 tons punching power
  - Leverage provides full capacity power without operator strain
    - Especially adapted to skylight, ventilating and tank flange work

This extremely versatile tool punches within 3/8" of an inside corner of angle iron and its jaw can fit into a space just 5-1/4" wide. It is especially useful for button punching work. A die adjusting key facilitates quick tool changing.

BUTTON PUNCHES & DIES

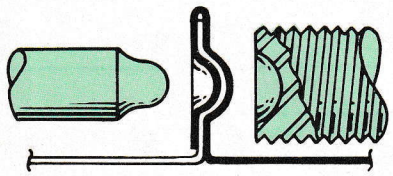

Fastens three thicknesses of 14 ga. mild steel together without punching a hole or using a rivet.

	No.	Sizes
Punch	0301	3/16", 7/32", 1/4"
Die	1502	

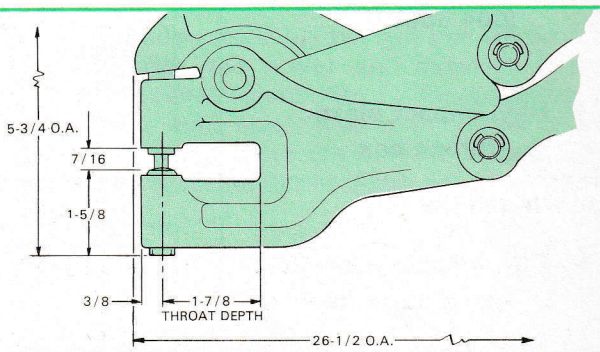

Capacity	2.7 ton
Maximum Diameter	11/32" (thru 12 ga. mild steel)
Maximum Thickness	1/8" mild steel (1/4" dia. hole)
Throat Depth	1-7/8"
Space Between Punch and Die	3/8"
Overall Length	26-1/2"
Weight	10-1/2 lbs.

PUNCH STYLE No. 2

DIE STYLE No. 6

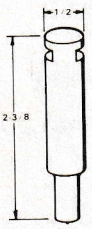

STANDARD STOCK ROUND PUNCH AND DIE SIZES

1/16"	7/32"
3/32"	1/4"
1/8"	9/32"
5/32"	5/16"
3/16"	11/32"

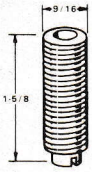

Add 25% for sizes not shown.

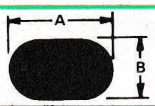

OVAL

"A" Max. 11/32"
"B" Max. 5/16"
"B" Min. 1/16"

Double Price when "B" is less than 3/32"

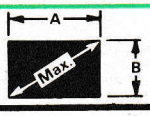

RECTANGLE

Max. across corners 11/32"
"B" Min. 1/16"

Double Price when "B" is less than 3/32"

SQUARE

"A" Min. 1/16" (1/32" Incre.)
"A" Max. 1/4"

Double Price when "A" is 1/16" to 3/32"

Add 25% for sizes other than 1/32" incre.

NOTE: All round dies shown as standard have .006" clearance over the nominal punch size and are suggested for 14 ga. mild steel and lighter. The punching of thicker metals requires additional clearance and it may be advantageous to purchase the next larger size die. Insufficient clearance in the die requires additional punching pressure and can result in possible damage to the tool.

No. 1 Hand Operated Punch

PUNCHES 1/2" DIA. HOLE THRU 3/16" MILD STEEL

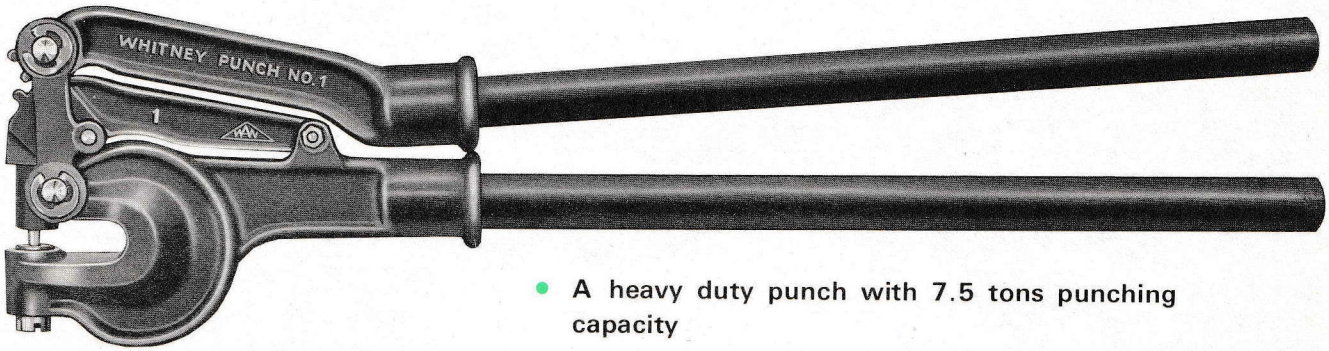

(002-055) with 1/4" punch and die

- A heavy duty punch with 7.5 tons punching capacity
- Special gear and cam action for easy operation
- Drop-forged steel parts

The No. 1 Hand Punch is the most powerful portable lever-operated tool in the W. A. Whitney line. It features gear and cam design for ease of punching holes as large as 9/16" diameter. Insertable pipe handles are used so the tool may be dismantled for storing or carrying in the toolbox. All main parts are drop-forged steel with wearing parts heat treated.

PUNCH STYLE
No. 1

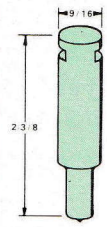

STANDARD STOCK ROUND PUNCH & DIE SIZES

1/16"	11/32"
3/32"	3/8"
1/8"	13/32"
5/32"	7/16"
3/16"	15/32"
7/32"	1/2"
1/4"	17/32"
9/32"	9/16"
5/16"	

Add 25% for sizes not shown.

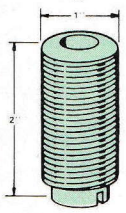

DIE STYLE
No. 1

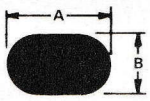

OVAL

"A" Max. 9/16"
"B" Max. 17/32"
"B" Min. 1/16"

Double Price when "B" is less than 3/32"

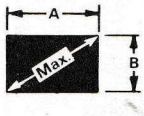

RECTANGLE

Max. across corners 9/16"
"B" Min. 1/16"

Double Price when "B" is less than 3/32"

SQUARE

"A" Min. 1/16"
(1/32" incre.)
"A" Max. 3/8"

Double Price when "A" is 1/16" to 3/32")

Add 25% for sizes other than 1/32" incre.

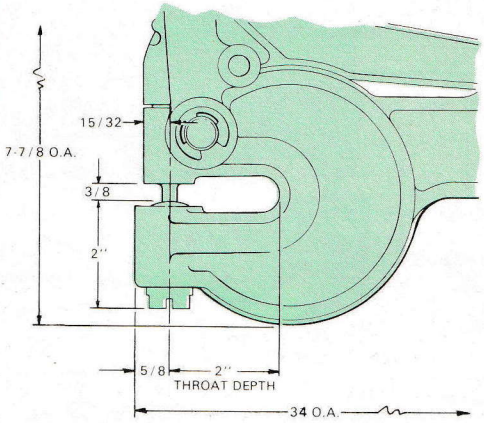

Capacity.....7.5 ton
Maximum Diameter.....9/16" (thru 10 ga. mild steel)
Maximum Thickness.....1/4" mild steel (3/8" dia. hole)
Throat Depth.....2"
Space between Punch and Die.....3/8"
Overall Length.....34" (includes 24" removable pipe handles)
Weight (including handles)..23 lbs.

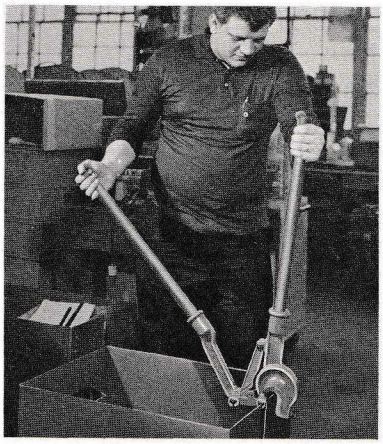

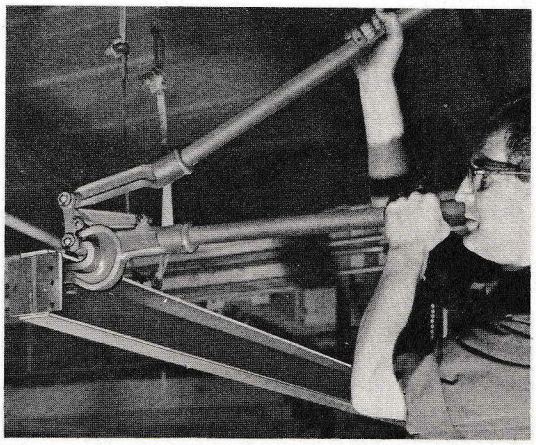

NOTE: All round dies shown as standard have .006" clearance over the nominal punch size and are suggested for 14 ga. mild steel and lighter. The punching of thicker metals requires additional clearance and it may be advantageous to purchase the next larger size die. Insufficient clearance in the die requires additional punching pressure and can result in possible damage to the tool.

No. 2 Hand Operated Punch

PUNCHES 1/4" DIA. HOLE THRU 1/4" MILD STEEL

(002-000) with 1/4" punch and die

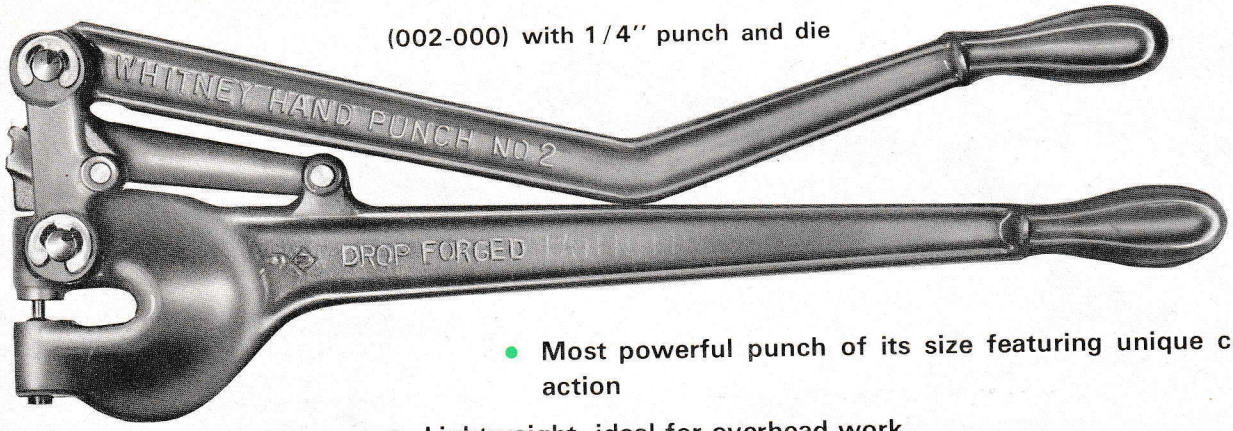

- Most powerful punch of its size featuring unique cam action
- Lightweight, ideal for overhead work
- All major parts drop-forged
- All wearing parts heat-treated

This durable, lightweight, powerhouse of a punch will provide years of trouble-free service. Unique cam action eliminates undue operator strain.

PUNCH STYLE No. 2

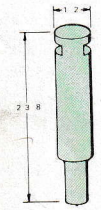

STANDARD STOCK ROUND PUNCH & DIE SIZES

1/16"	9/32"
3/32"	11/32"
1/8"	3/8"
5/32"	13/32"
3/16"	7/16"
7/32"	1/2"
1/4"	

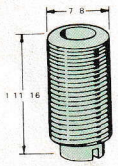

DIE STYLE No. 2

Add 25% for sizes not shown.

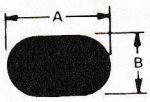

OVAL

"A" Max. 1/2"
"B" Max. 15/32"
"B" Min. 1/16"

Double Price when "B" is less than 3/32"

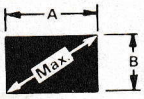

RECTANGLE

Max. across corners 1/2"
"B" Min. 1/16"

Double Price when "B" is less than 3/32"

SQUARE

"A" Min. 1/16" (1/32" incre.)
"A" Max. 5/16"

Double Price when "A" is 1/16" to 3/32"

Add 25% for sizes other than 1/32" incre.

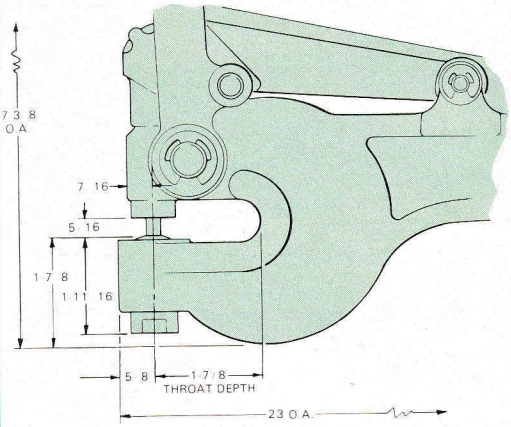

Capacity.....5 ton
Maximum Diameter.....1/2" (thru 10 ga. mild steel)
Maximum Thickness.....1/4" mild steel (9/32 dia. hole)
Throat Depth.....1-7/8"
Space between Punch and Die.....5/16"
Overall Length.....23"
Weight.....14 lbs.

No. 2V VISE (002-027)

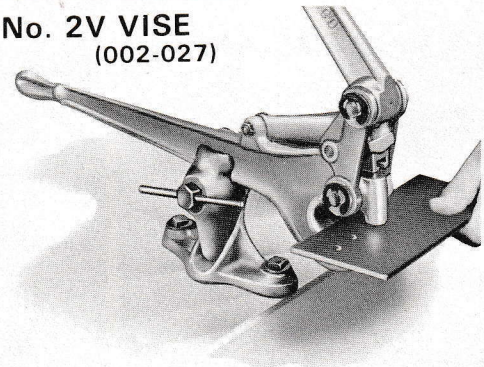

This vise converts No. 2 Series Hand Punches into handy, lever operated bench press units.

NOTE: All round dies shown as standard have .006" clearance over the nominal punch size and are suggested for 14 ga. mild steel and lighter. The punching of thicker metals requires additional clearance and it may be advantageous to purchase the next larger size die. Insufficient clearance in the die requires additional punching pressure and can result in possible damage to the tool.

No. 2 Hand Operated Channel Iron Punch

PUNCHES 1/4" DIA. HOLE THRU 1/4" MILD STEEL

- Special design allows easy punching of channel iron webs

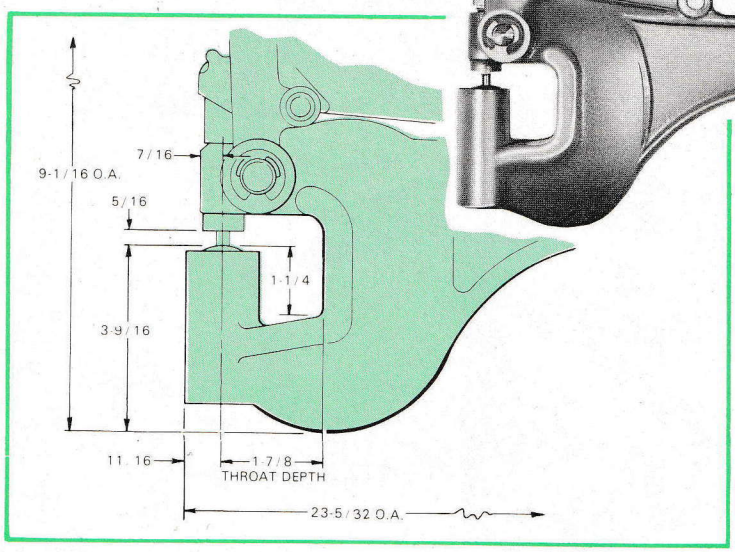

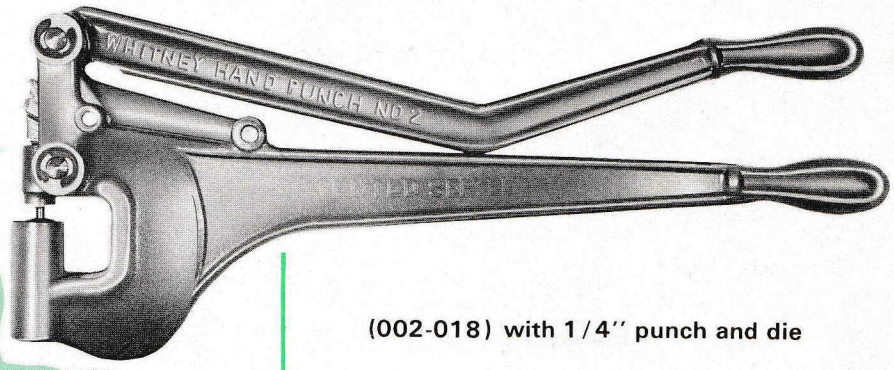

(002-018) with 1/4" punch and die

The No. 2 Channel Iron Punch is identical to the No. 2 Standard Punch except for its jaws. The special jaw design makes this an ideal tool for punching the web in channel iron.

Capacity.....5 ton
Maximum Diameter...1/2" (thru 10 ga. mild steel)
Maximum Thickness...1/4" mild steel (9/32" dia. hole)
Weight.....17 lbs.
Tooling.....Same as No. 2 Standard Punch

NOTE: All round dies shown as standard have .006" clearance over the nominal punch size and are suggested for 14 ga. mild steel and lighter. The punching of thicker metals requires additional clearance and it may be advantageous to purchase the next larger size die. Insufficient clearance in the die requires additional punching pressure and can result in possible damage to the tool.

Hand Operated Shear

CHICAGO SLITTING SHEAR WITH UP TO 1/8" CAPACITY

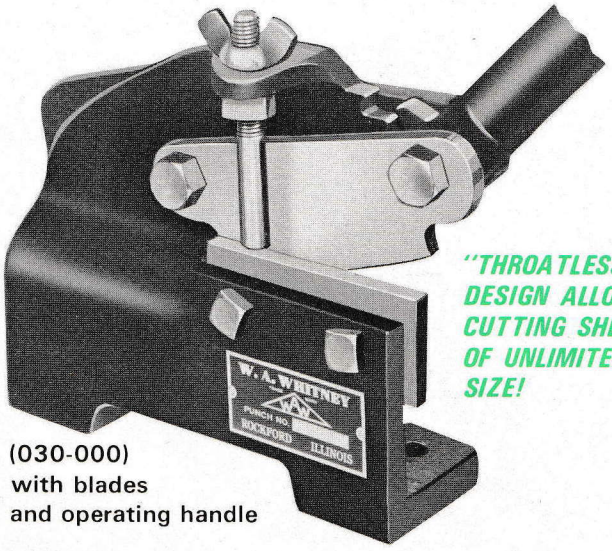

"THROATLESS" DESIGN ALLOWS CUTTING SHEETS OF UNLIMITED SIZE!

(030-000) with blades and operating handle

Capacity.....1/8" mild steel
Blade Length.....3-1/2"
Overall Length.....11"
Weight.....18 lbs.

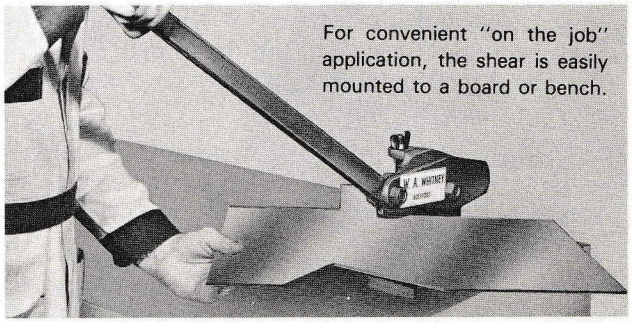

For convenient "on the job" application, the shear is easily mounted to a board or bench.

Cut in a straight line or a curve with ease. The "Throatless" design of this shear allows cutting of large sheets without frame interference. It is also capable of shearing steel bars, banding, angle iron, electric cable and wire, plus many nonmetallic materials.

The main frame is a solid one piece casting with offset for clearance in cutting long sheets. Blades are made of high grade tool steel for long life. An adjustable hold down is provided with the shear.

This shear, used in conjunction with the No. 2 series punches, make an ideal kit for use in the installation of overhead doors.

Slitting Shears

- Hand operated
- Bench or floor mounted
- Replaceable blades
- Readily portable

THROATLESS DESIGN ACCOMMODATES LARGE SHEETS!

The throatless design of these shears allow cutting of large sheets without frame interference. They are also capable of shearing steel bars and rods, plus many nonmetallic materials.

The main frame is a high quality forging, and the replaceable blades are made of high-grade tool steel, properly hardened and tempered to give long life. An adjustable hold down clamp aids in securing the material.

The compound leverage of the operating handle enables the operator to develop sufficient force to easily perform work within the rated capacity of the shears.

These shears are especially suitable for use in model shops and for prototype fabrication. The Model 5 Shear is a favorite of field tradesmen, as it is easily transportable and can be used for on-site construction work.

SPECIFICATIONS	5	3/300
Mild Steel	3/16″	1/8″
Flat Bar	1/4″	5/32″
Rod	15/32″	1/2″
Blade Length	6-5/16″	11-13/16″
Weight	35 lbs.	66 lbs.

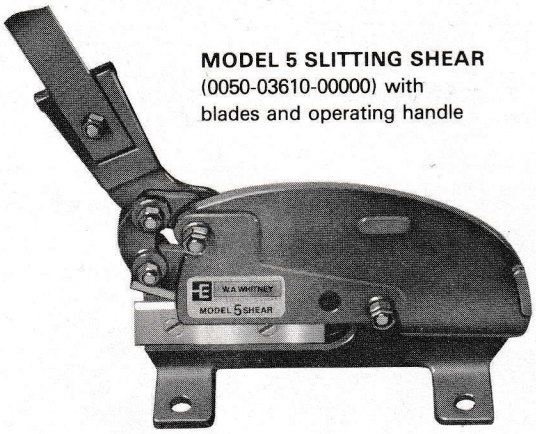

MODEL 5 SLITTING SHEAR
(0050-03610-00000) with
blades and operating handle

MODEL 3/300 SLITTING SHEAR
(0050-03620-00000) with
blades and operating handle

Rod Shears

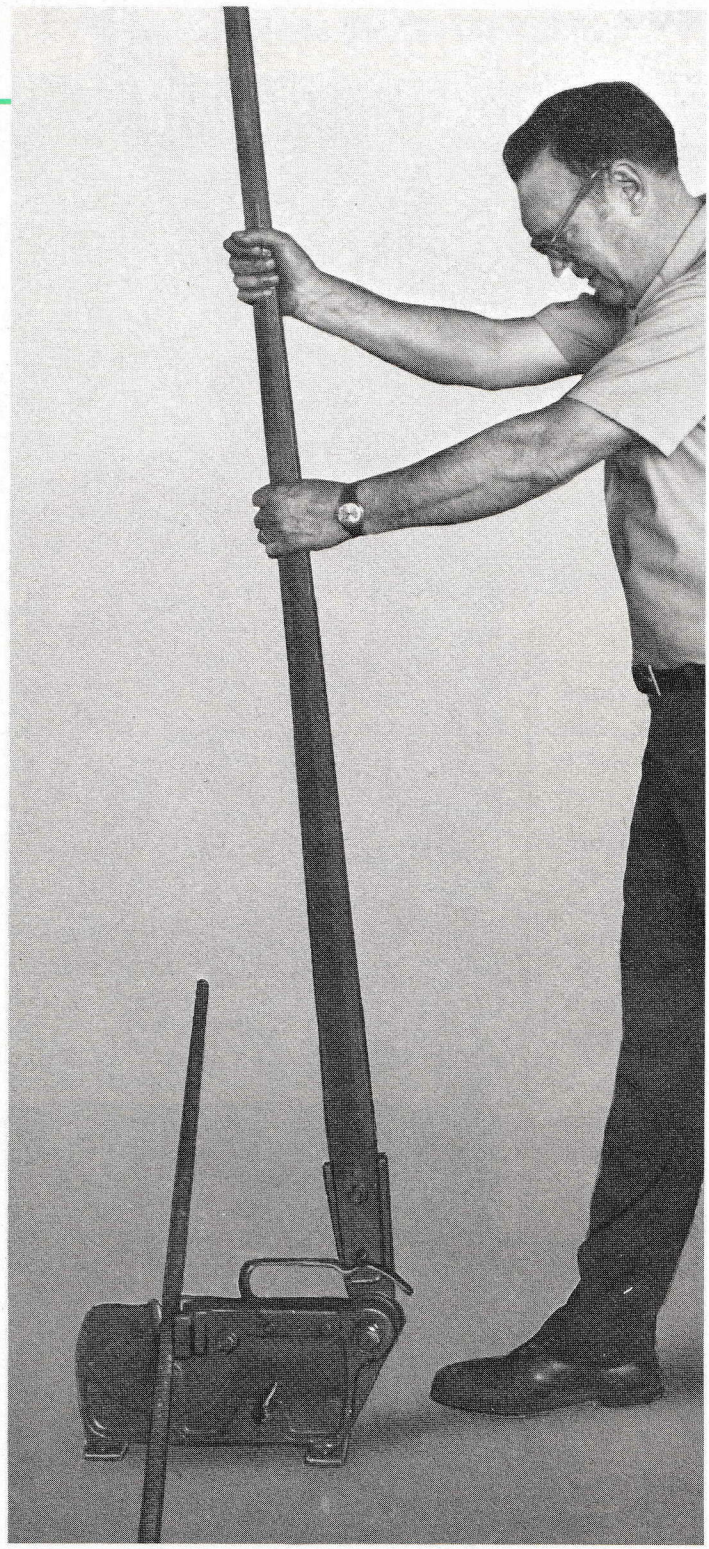

- Hand operated
- Bench or floor mounted
- Replaceable blades
- Readily portable

The design of these rod shears make them extremely desireable for short run rod shearing. They have the capability to shear rounds, flats, and square rods with equal ease.

The top loading design feature of these shears enables much faster shearing performance than possible on competitive feed-thru models. A geared lever provides positive, quick cutting action of the blade arm. Distorted or preformed rods can also be loaded and sheared quickly.

The shears are equipped with high quality, replaceable tool steel blades that are properly hardened and tempered to provide long life. Main frames, blade arms, and actuating levers are all made of forged steel and will give years of trouble-free service with only normal maintenance.

These shears can be permanently mounted in the shop, or transported to the job site.

TOP LOADING FOR FASTER OPERATING!

MODEL 22 ROD SHEAR
(0050-03630-00000) with blades and operating handle

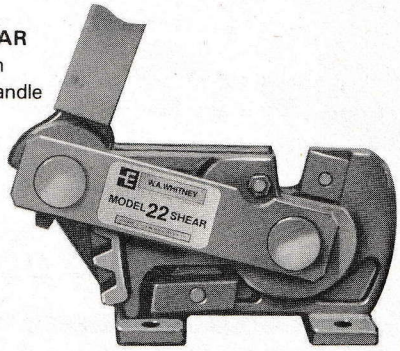

MODEL 26 ROD SHEAR
(0050-03640-00000) with blades and operating handle

SPECIFICATIONS	22	26
∅ Rod	3/4″	1″
▬ Flat Bar	1-3/16″ x 3/8″	2″ x 3/8″
■ Square Bar	5/8″	3/4″
Blade Length	1-3/16″	2″
Weight	31 lbs.	75 lbs.

No. 91 Series Bench Presses

- Hefty 10 ton capacity presses
- Lever operated
- Rugged drop-forged construction
- All wearing parts are heat-treated
- Uses standard tooling
- Huge selection of special tooling in stock
- Wide work range applications

The No. 91 series Bench Presses can perform such a wide range of work applications that one press is a whole fabricating shop in itself. A large selection of standard punch and die sizes and many special application punch and die sets are available.

These multi-purpose presses can be used for punching, slotting and louvering, notching angle iron, corner rounding notching, combination notching/coping, pipe notching, electrical work and many other applications. This makes it the biggest bench press buy available in its class anywhere. No wonder it finds exceptionally wide usage in ornamental iron, sheet metal, and model shops, as well as in general industrial applications and in the plants of electrical equipment manufacturers.

Tool changeover is simple and quick, and the presses' large throat openings facilitate easy material handling. All working parts on Nos. 91, 92 and 94 Presses are interchangeable.

A set of narrow strippers is included with each Press. The Model 91 also contains as a standard feature, an adjustable back gage.

SPECIFICATIONS

Capacity	10 ton
Maximum Diameters	2" thru 12 ga. mild steel
	1-3/4" thru 1/8" mild steel
	3/4" thru 3/16" mild steel
	1/2" thru 1/4" mild steel
	Channel — 2-1/2" flange x 1/4" web
	Angle Iron — 2-1/2" x 2-1/2" x 1/4"
Maximum Thickness	1/4" mild steel (1/2" dia. hole)
Ram Stroke	5/8"
Shut Height	3-1/8"
Weight: No. 91	79 lbs.
No. 92	155 lbs.
No. 94	655 lbs.

All presses include one set of narrow strippers.

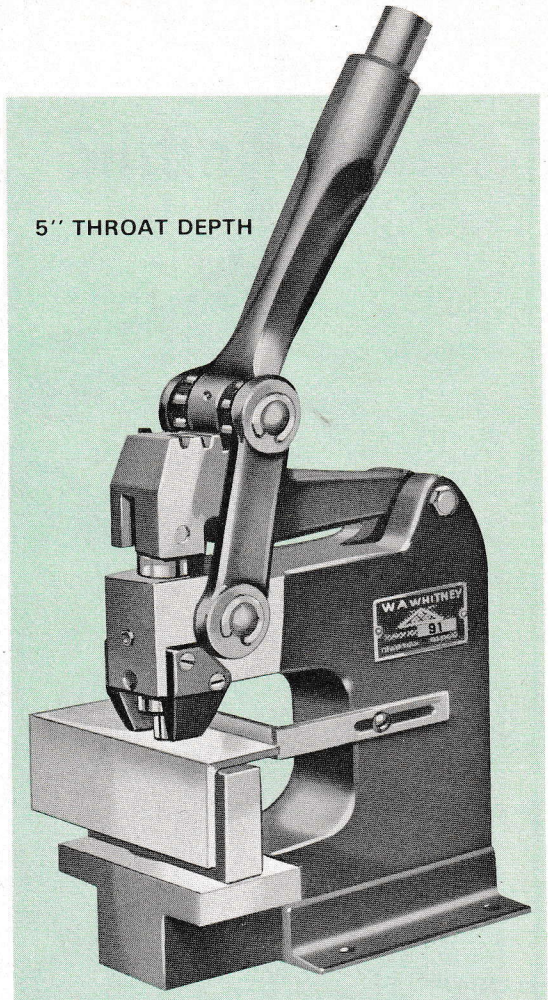

No. 91 Bench Press (091-298) with adjustable back gage

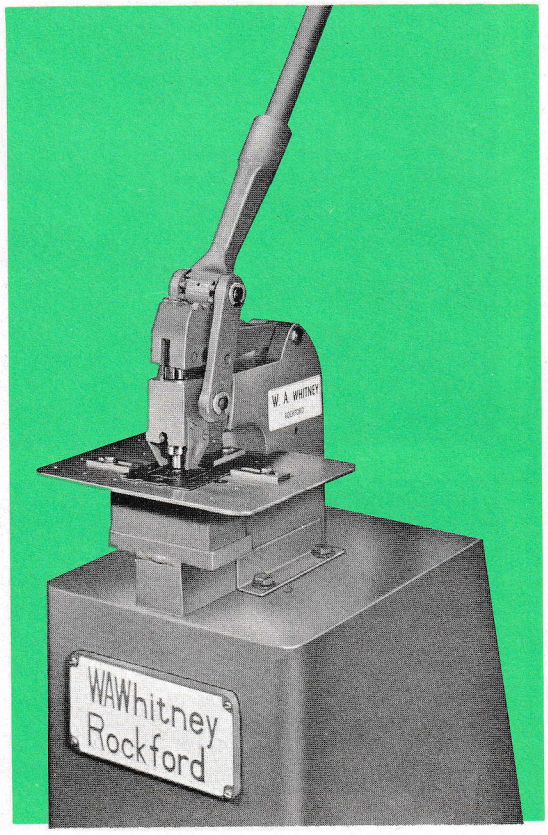

. . . A FABRICATING SHOP IN ITSELF

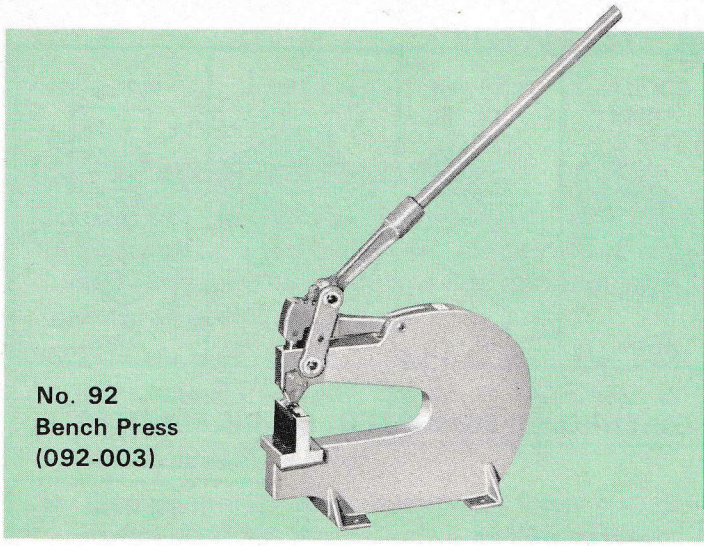

No. 92
Bench Press
(092-003)

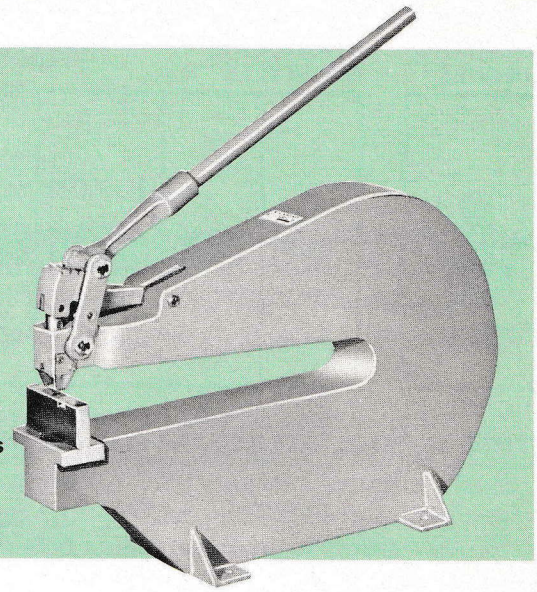

No. 94
Bench Press
(094-004)

No. 91 Series Worktable

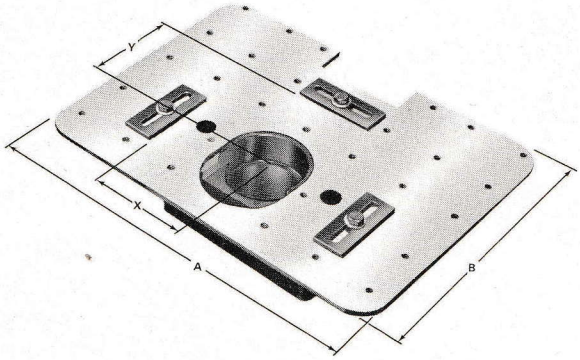

This popular worktable assembly is available for all Model 91 series Presses and mounts in the same manner as a regular die shoe. The Worktable has tapped holes for positioning of three adjustable gages. Gaging assures that all duplicate work pieces are accurate and eliminates hours of costly layout time.

Press No.	Work table * No.	"X" Max.	"Y" Max.	"A"	"B"
91	091-301	5"	5"	12"	9"
92	092-004	7"	10"	16"	14"
94	094-005	11"	24"	24"	28"

* Work Table Assembly includes table, die shoe and (3) adjustable stops.

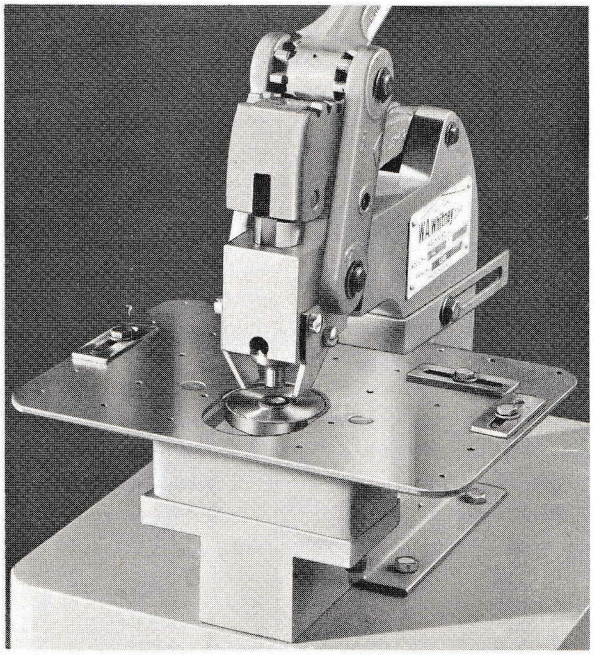

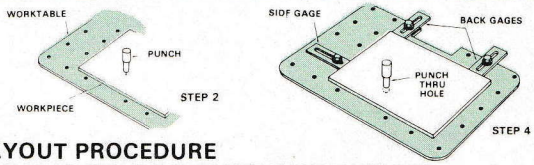

LAYOUT PROCEDURE FOR MAKING DUPLICATE WORK PIECES

1. Layout first work piece and mark hole locations with center punch.
2. Position work piece on Worktable and bring punch center point to pre-marked location for first hole.
3. When aligned, pierce this hole and leave the punch in the hole.
4. Position Worktable gages as required.
5. Run entire lot of material requiring this hole.
6. Repeat above procedure for next hole. Etc.

Tooling for No. 91 Series Bench Presses

STANDARD PUNCHES

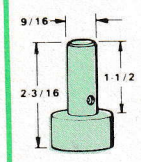

No. 91
1/16" thru 2"

STANDARD DIE STYLES

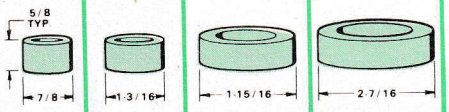

No. 91 – 7/8 | No. 91-1-3/16 | No. 91 – 1-15/16 | No. 91 – 2-7/16

DIE SHOES

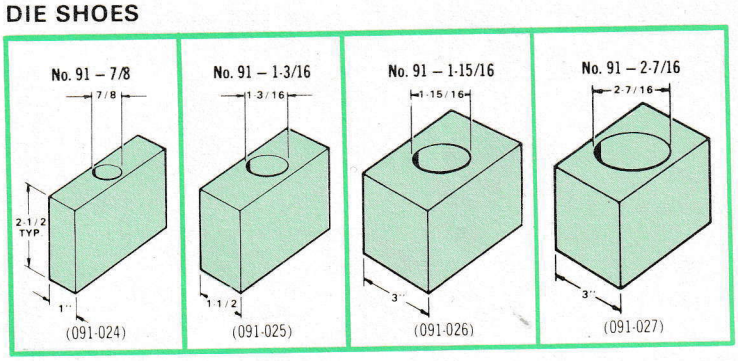

TYPICAL TOOLING SET-UP FOR PIERCING HOLES UP THRU 2" DIAMETER

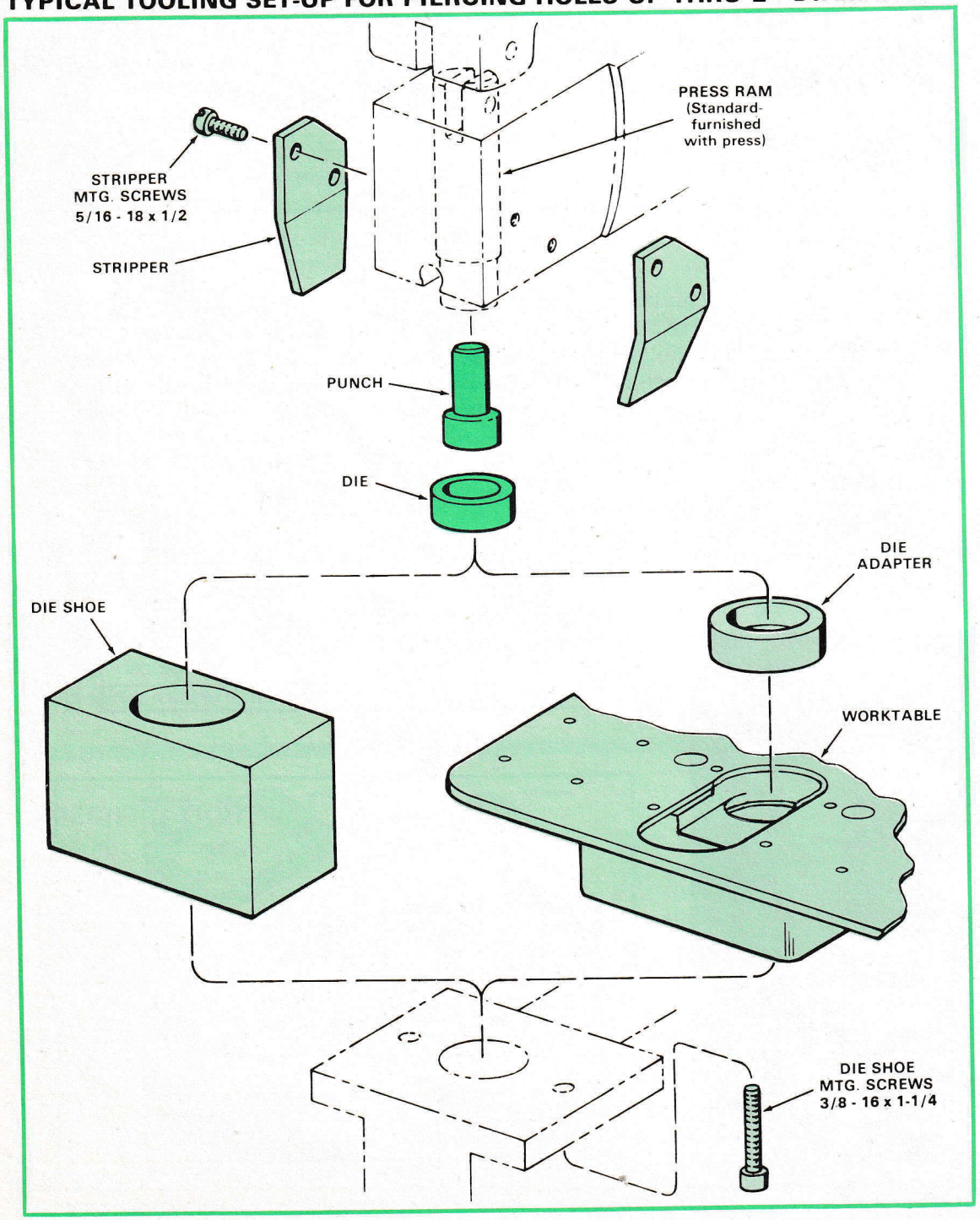

DIE ADAPTERS
for use with worktable assembly

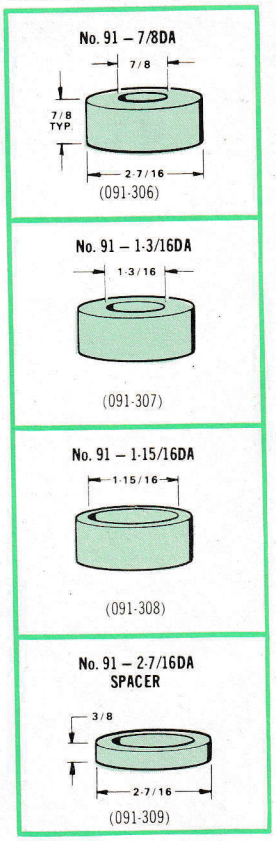

STRIPPERS (one LH and one RH required)

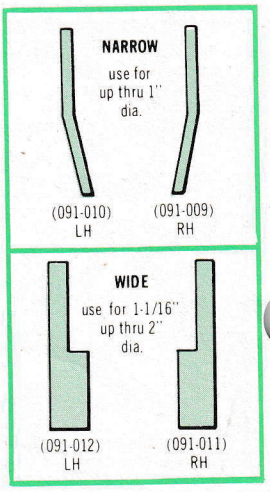

GENERAL INFORMATION

ORDERING INFORMATION

In order to receive the fastest possible service in processing your order, we request that you include the following information on all of your orders, as indicated below:

A. All shaped, special purpose punches and dies should include type and thickness of material to be punched, and type of press that tool will be used on.

B. Please specify any deviations from standards, sizes or styles as shown in catalog.

DELIVERY

Stock Punches and Dies

All standard punches and dies listed in this catalog are available for shipment from stock. Please allow at least 48 hours for processing your order.

Non-Stock Punches and Dies

All standard punches and dies which are noted as non-stock items require 10 days to 3 weeks for delivery.

Special Purpose Punches and Dies

For any special purpose punch and die not listed in the catalog, please contact the Proposal Department of W. A. Whitney Corp., for delivery and price.

SHEAR ON PUNCHES

Round Punches . . . All round punches up thru .5625 diameter are flat faced with center point. All round punches from .5625 diameter thru 2.000 have 1/8" twin shear with center point.

Shaped Punches . . . All shaped punches up thru .5625 equivalent diameter, are flat faced with center point. All shaped punches from .5625 diameter up thru 2.000 diameter, have 1/8" housetop shear and center point.

90° Orientation

Shaped Punches and Dies . . . All shaped punches and dies are notched for left to right punching. Front to back orientation is available as an option.

Punch and Die Options

Punches . . . Special purpose punches, in sizes from 1/16" thru 2", are also available at an additional charge which may be determined from the current Price List. These options include — no shear with center point; no shear-no center point; high wear steel in both round and shaped styles; and shaped punches with front to back orientation.

Dies . . . High wear steel dies are available in sizes from 1/16" thru 2" in both round and shaped styles.

DETERMINING DIE CLEARANCE

In order to receive optimum performance from a punch and die, it is necessary that the proper die clearance be provided in the die for the material being pierced. As a general rule, proper die clearance should run 8% to 20% of the thickness of material being pierced.

CLEARANCE			
GAGE	.006	.021*	.037**
22 ga. thru 14 ga.	X		
12 ga. thru 5/32"		X	
3/16" thru 1/4"			X

*Use next 1/64" larger die with .006 clearance.
**Use next 1/32" larger die with .006 clearance.

Tooling for No. 91 Series Bench Presses (cont'd.)

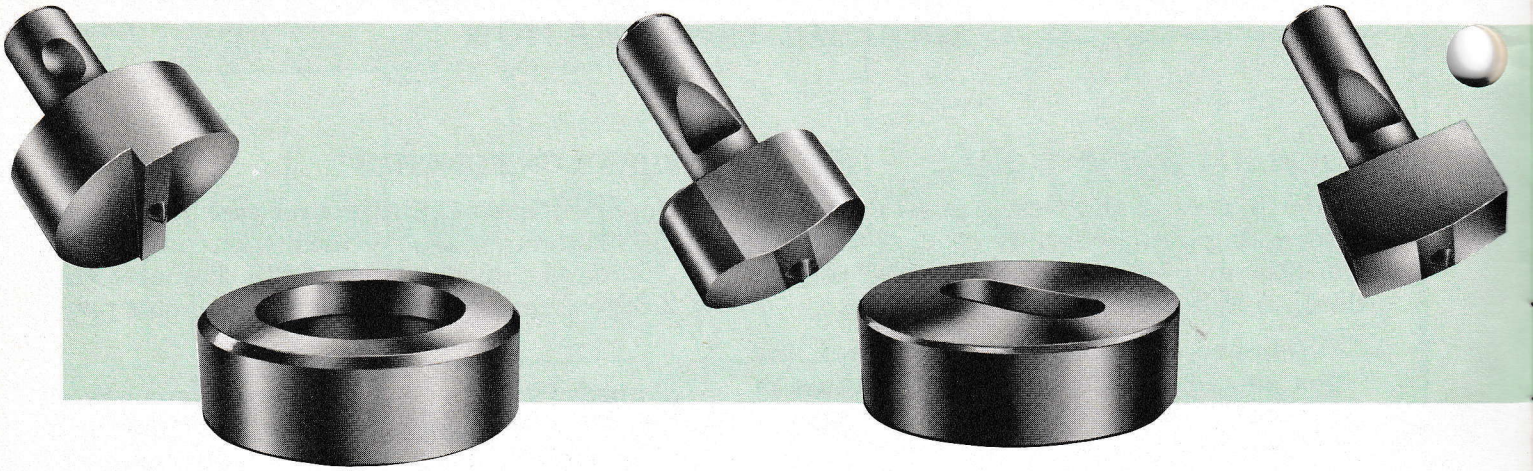

ROUND		PUNCH All Punch Sizes Listed Here Are Stock Items			
		DIE			
Hole Size	Decimal Equiv.	Clearance Die O.D.	.006 22 ga. thru 14 ga.	.021 12 ga. thru 5/32"	.037 3/16" thru 1/4"
1/16	.0625	7/8	Stock	N. S.	Stock
3/32	.0938	7/8	Stock	N. S.	Stock
1/8	.1250	7/8	Stock	Stock	Stock
9/64	.1406	7/8	Stock	Stock	Stock
5/32	.1562	7/8	Stock	Stock	Stock
11/64	.1719	7/8	Stock	Stock	Stock
3/16	.1875	7/8	Stock	Stock	Stock
13/64	.2031	7/8	Stock	Stock	Stock
7/32	.2188	7/8	Stock	Stock	Stock
1/4	.2500	7/8	Stock	Stock	Stock
17/64	.2656	7/8	Stock	Stock	Stock
9/32	.2812	7/8	Stock	N. S.	Stock
19/64	.2969	7/8	Stock	Stock	Stock
5/16	.3125	7/8	Stock	Stock	Stock
21/64	.3281	7/8	Stock	Stock	Stock
11/32	.3438	7/8	Stock	Stock	Stock
23/64	.3594	7/8	Stock	Stock	Stock
3/8	.3750	7/8	Stock	Stock	Stock
25/64	.3906	7/8	Stock	Stock	Stock
13/32	.4062	7/8	Stock	Stock	Stock
27/64	.4219	7/8	Stock	Stock	Stock
7/16	.4375	7/8	Stock	N. S.	Stock
15/32	.4688	7/8	Stock	N. S.	Stock
1/2	.5000	7/8	Stock	N. S.	Stock
17/32	.5312	7/8	Stock	N. S.	Stock
9/16	.5625	7/8	Stock	N. S.	Stock
19/32	.5938	7/8	Stock	N. S.	Stock
5/8	.6250	7/8	Stock	N. S.	Stock
21/32	.6562	1-3/16	Stock	N. S.	Stock
11/16	.6875	1-3/16	Stock	N. S.	Stock
23/32	.7188	1-3/16	Stock	N. S.	Stock
3/4	.7500	1-3/16	Stock	N. S.	Stock
25/32	.7812	1-3/16	Stock	N. S.	Stock
13/16	.8125	1-3/16	Stock	N. S.	Stock
27/32	.8438	1-3/16	Stock	N. S.	Stock

ROUND		PUNCH All Punch Sizes Listed Here Are Stock Items			
		DIE			
Hole Size	Decimal Equiv.	Clearance Die O.D.	.006 22 ga. thru 14 ga.	.021 12 ga. thru 5/32"	.037 3/16" thru 1/4"
7/8	.8750	1-3/16	Stock	N. S.	Stock
29/32	.9062	1-15/16	Stock	N. S.	Stock
15/16	.9375	1-15/16	Stock	N. S.	Stock
31/32	.9688	1-15/16	Stock	N. S.	Stock
1	1.0000	1-15/16	Stock	N. S.	Stock
1-1/16	1.0625	1-15/16	Stock	N. S.	Stock
1-1/8	1.1250	1-15/16	Stock	N. S.	Stock
1-3/16	1.1875	1-15/16	Stock	N. S.	Stock
1-7/32	1.2188	1-15/16	Stock	N. S.	Stock
1-1/4	1.2500	1-15/16	Stock	N. S.	Stock
1-9/32	1.2812	1-15/16	Stock	N. S.	Stock
1-5/16	1.3125	1-15/16	Stock	N. S.	Stock
1-11/32	1.3438	1-15/16	Stock	N. S.	Stock
1-3/8	1.3750	1-15/16	Stock	N. S.	Stock
1-13/32	1.4062	1-15/16	Stock	N. S.	Stock
1-7/16	1.4375	1-15/16	Stock	N. S.	Stock
1-15/32	1.4688	1-15/16	Stock	N. S.	Stock
1-1/2	1.5000	1-15/16	Stock	N. S.	Stock
1-17/32	1.5312	2-7/16	Stock	N. S.	Stock
1-9/16	1.5625	2-7/16	Stock	N. S.	Stock
1-19/32	1.5938	2-7/16	Stock	N. S.	Stock
1-5/8	1.6250	2-7/16	Stock	N. S.	Stock
1-21/32	1.6562	2-7/16	Stock	N. S.	Stock
1-11/16	1.6875	2-7/16	Stock	N. S.	Stock
1-23/32	1.7188	2-7/16	Stock	N. S.	Stock
1-3/4	1.7500	2-7/16	Stock	N. S.	Stock
1-25/32	1.7812	2-7/16	Stock	N. S.	Stock
1-13/16	1.8125	2-7/16	Stock	N. S.	Stock
1-27/32	1.8438	2-7/16	Stock	N. S.	Stock
1-7/8	1.8750	2-7/16	Stock	N. S.	Stock
1-29/32	1.9062	2-7/16	Stock	N. S.	Stock
1-15/16	1.9375	2-7/16	Stock	N. S.	Stock
1-31/32	1.9688	2-7/16	Stock	N. S.	Stock
2	2.0000	2-7/16	Stock	N. S.	Stock

N. S. Designates Non-Stock Items

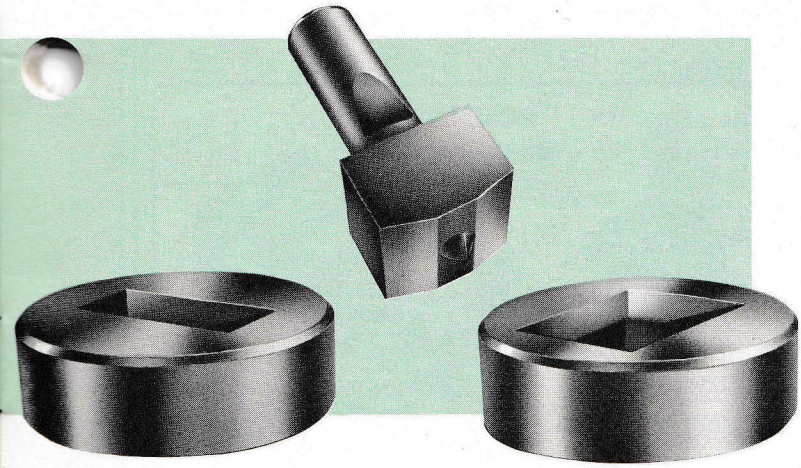

OBROUND

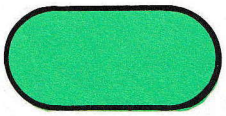

Hole Size	Decimal Equiv.	PUNCH: All Punch Sizes Listed Here Are Stock Items — DIE: Clearance / Die O.D.	.006 / 22 ga. thru 14 ga.	.021 / 12 ga. thru 5/32"	.037 / 3/16" thru 1/4"
1/8 x 1/4	.1250 x .2500	7/8	Stock	N. S.	N. S.
1/8 x 3/8	.1250 x .3750	7/8	Stock	N. S.	N. S.
1/8 x 1/2	.1250 x .5000	7/8	Stock	N. S.	N. S.
1/8 x 3/4	.1250 x .7500	1-3/16	Stock	N. S.	N. S.
1/8 x 1-1/4	.1250 x 1.2500	1-15/16	Stock	N. S.	N. S.
3/16 x 1/4	.1875 x .2500	7/8	Stock	N. S.	N. S.
3/16 x 3/8	.1875 x .3750	7/8	Stock	N. S.	N. S.
3/16 x 1/2	.1875 x .5000	7/8	Stock	N. S.	N. S.
3/16 x 3/4	.1875 x .7500	1-3/16	Stock	N. S.	N. S.
3/16 x 1	.1875 x 1.0000	1-15/16	Stock	N. S.	N. S.
7/32 x 3/8	.2188 x .3750	7/8	Stock	N. S.	N. S.
7/32 x 1/2	.2188 x .5000	7/8	Stock	N. S.	N. S.
1/4 x 3/8	.2500 x .3750	7/8	Stock	N. S.	N. S.
1/4 x 1/2	.2500 x .5000	7/8	Stock	N. S.	N. S.
1/4 x 5/8	.2500 x .6250	7/8	Stock	N. S.	N. S.
1/4 x 3/4	.2500 x .7500	1-3/16	Stock	N. S.	N. S.
1/4 x 1	.2500 x 1.0000	1-15/16	Stock	N. S.	N. S.
9/32 x 3/8	.2812 x .3750	7/8	Stock	N. S.	N. S.
9/32 x 1/2	.2812 x .5000	7/8	Stock	N. S.	N. S.
9/32 x 5/8	.2812 x .6250	7/8	Stock	N. S.	N. S.
9/32 x 3/4	.2812 x .7500	1-3/16	Stock	N. S.	N. S.
9/32 x 1	.2812 x 1.0000	1-15/16	Stock	N. S.	N. S.
5/16 x 1/2	.3125 x .5000	7/8	Stock	N. S.	N. S.
5/16 x 5/8	.3125 x .6250	7/8	Stock	N. S.	N. S.
5/16 x 3/4	.3125 x .7500	1-3/16	Stock	N. S.	N. S.
5/16 x 1	.3125 x 1.0000	1-15/16	Stock	N. S.	N. S.
5/16 x 1-1/2	.3125 x 1.5000	1-15/16	Stock	N. S.	N. S.
3/8 x 1/2	.3750 x .5000	7/8	Stock	N. S.	N. S.
3/8 x 3/4	.3750 x .7500	1-3/16	Stock	N. S.	N. S.
3/8 x 1	.3750 x 1.0000	1-15/16	Stock	N. S.	N. S.
1/2 x 5/8	.5000 x .6250	7/8	Stock	N. S.	N. S.
1/2 x 3/4	.5000 x .7500	1-3/16	Stock	N. S.	N. S.
1/2 x 1	.5000 x 1.0000	1-15/16	Stock	N. S.	N. S.
1/2 x 1-1/2	.5000 x 1.5000	1-15/16	Stock	N. S.	N. S.

RECTANGLE

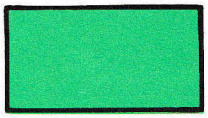

Hole Size	Decimal Equiv.	PUNCH: All Punch Sizes Listed Here Are Stock Items — DIE: Clearance / Die O.D.	.006 / 22 ga. thru 14 ga.	.021 / 12 ga. thru 5/32"	.037 / 3/16" thru 1/4"
1/8 x 1/4	.1250 x .2500	7/8	Stock	N. S.	N. S.
1/8 x 1/2	.1250 x .5000	7/8	Stock	N. S.	N. S.
1/8 x 3/4	.1250 x .7500	1-3/16	Stock	N. S.	N. S.
1/8 x 1	.1250 x 1.0000	1-15/16	Stock	N. S.	N. S.
1/8 x 1-1/4	.1250 x 1.2500	1-15/16	Stock	N. S.	N. S.
3/16 x 3/8	.1875 x .3750	7/8	Stock	N. S.	N. S.
3/16 x 1	.1875 x 1.0000	1-15/16	Stock	N. S.	N. S.
1/4 x 1/2	.2500 x .5000	7/8	Stock	N. S.	N. S.
1/4 x 5/8	.2500 x .6250	1-3/16	Stock	N. S.	N. S.
1/4 x 3/4	.2500 x .7500	1-3/16	Stock	N. S.	N. S.
1/4 x 1	.2500 x 1.0000	1-15/16	Stock	N. S.	N. S.
5/16 x 1-1/2	.3125 x 1.5000	2-7/16	Stock	N. S.	N. S.
3/8 x 1	.3750 x 1.0000	1-15/16	Stock	N. S.	N. S.
7/16 x 1	.4375 x 1.0000	1-15/16	Stock	N. S.	N. S.
1/2 x 5/8	.5000 x .6250	1-3/16	Stock	N. S.	N. S.
1/2 x 3/4	.5000 x .7500	1-15/16	Stock	N. S.	N. S.
1/2 x 1	.5000 x 1.0000	1-15/16	Stock	N. S.	N. S.
5/8 x 1-1/4	.6250 x 1.2500	1-15/16	Stock	N. S.	N. S.
3/4 x 1	.7500 x 1.0000	1-15/16	Stock	N. S.	N. S.
3/4 x 1-1/4	.7500 x 1.2500	2-7/16	Stock	N. S.	N. S.
1 x 1-1/4	1.0000 x 1.2500	2-7/16	Stock	N. S.	N. S.

SQUARE

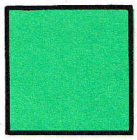

Hole Size	Decimal Equiv.	PUNCH: All Punch Sizes Listed Here Are Stock Items — DIE: Clearance / Die O.D.	.006 / 22 ga. thru 14 ga.	.021 / 12 ga. thru 5/32"	.037 / 3/16" thru 1/4"
3/16 x 3/16	.1875 x .1875	7/8	Stock	N. S.	N. S.
1/4 x 1/4	.2500 x .2500	7/8	Stock	N. S.	Stock
9/32 x 9/32	.2812 x .2812	7/8	Stock	N. S.	Stock
5/16 x 5/16	.3125 x .3125	7/8	Stock	N. S.	N. S.
3/8 x 3/8	.3750 x .3750	7/8	Stock	N. S.	Stock
13/32 x 13/32	.4062 x .4062	7/8	Stock	N. S.	Stock
7/16 x 7/16	.4375 x .4375	1-3/16	Stock	N. S.	N. S.
1/2 x 1/2	.5000 x .5000	1-3/16	Stock	N. S.	Stock
17/32 x 17/32	.5312 x .5312	1-3/16	Stock	N. S.	Stock
9/16 x 9/16	.5625 x .5625	1-3/16	Stock	N. S.	Stock
5/8 x 5/8	.6250 x .6250	1-15/16	Stock	N. S.	N. S.
11/16 x 11/16	.6875 x .6875	1-15/16	Stock	N. S.	N. S.
3/4 x 3/4	.7500 x .7500	1-15/16	Stock	N. S.	N. S.
7/8 x 7/8	.8750 x .8750	1-15/16	Stock	N. S.	N. S.
1 x 1	1.0000 x 1.0000	1-15/16	Stock	N. S.	N. S.
1-1/4 x 1-1/4	1.2500 x 1.2500	2-7/16	Stock	N. S.	N. S.
1-3/8 x 1-3/8	1.3750 x 1.3750	2-7/16	Stock	N. S.	N. S.

N. S. Designates Non-Stock Items

Tooling for No. 91 Series Bench Presses (cont'd.)

NON-STOCK PUNCHES AND DIES

Round, obround, rectangle and square punch and die sizes not listed on pages 14 and 15 are non-stock items. Other non-stock items are the hexagon, type "P" and type "D" shapes.

The die O.D. required for use with these shapes may be determined from the charts shown on this page by using the following procedure:

Make a full size sketch of the shape. Determine the "A" dimension by measuring as shown in the illustrations.

Example: A square punch and die set with an "A" dimension of 17/64" (.266) is required. Since this size is not listed in the chart on page 15 it is not a stock item. By using the chart on this page, a die O.D. of 7/8" is required.

ROUND Non-Stock

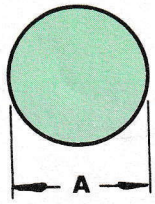

Punch Size A	Die O.D.
.050 to .625	7/8
.626 to .875	1-3/16
.876 to 1.500	1-15/16
1.501 to 2.000	2-7/16

OBROUND "TYPE M"

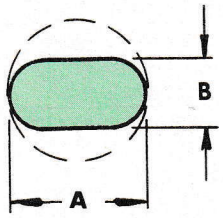

A	Die O.D.
.125 to .625	7/8
.626 to .875	1-3/16
.876 to 1.500	1-15/16
1.501 to 2.000	2-7/16

RECTANGLE "TYPE N"

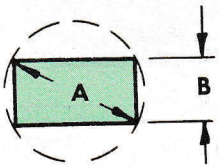

A	Die O.D.
.125 to .625	7/8
.626 to .875	1-3/16
.876 to 1.500	1-15/16
1.501 to 2.000	2-7/16

Where "A" or "B" dimension is less than 1/8" double the price shown in the price list.

SQUARE "TYPE R"

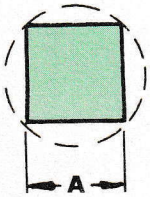

A	Die O.D.
.062 to .406	7/8
.407 to .594	1-3/16
.595 to 1.000	1-15/16
1.001 to 1.375	2-7/16

HEXAGON

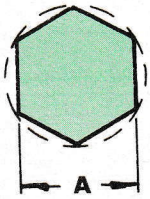

A	Die O.D.
.125 to .500	7/8
.501 to .750	1-3/16
.751 to 1.250	1-15/16
1.251 to 1.688	2-7/16

TYPE "P"

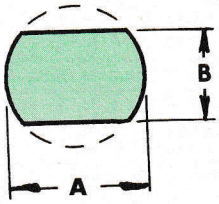

A	Die O.D.
.125 to .625	7/8
.626 to .875	1-3/16
.876 to 1.500	1-15/16
1.501 to 2.000	2-7/16

TYPE "D"

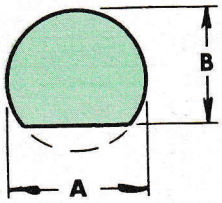

A	Die O.D.
.125 to .625	7/8
.626 to .875	1-3/16
.876 to 1.500	1-15/16
1.501 to 2.000	2-7/16

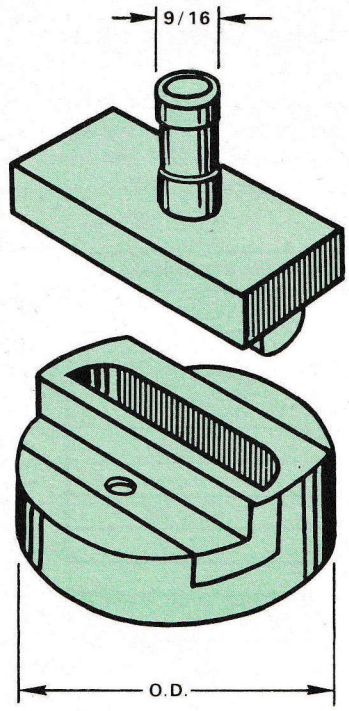

LOUVRE PUNCH AND DIE ASSEMBLY

When the location of the first louvre to be punched has been determined and punched, the material is slid to the rear of the die and pulled forward. This makes use of the back of the die for accurate gaging of dimension D. This feature when used with the No. 91 Worktable for side gaging makes accurate, fast, inexpensive louvres possible.

Louvre punches and dies can be mounted so the material can be fed from the side. This makes the throat depth less critical as long, narrow strips can be fed with the width of the strip the critical dimension.

Other sizes of louvre punches and dies are available — please write for quotes. Please specify type and thickness of the material to be punched.

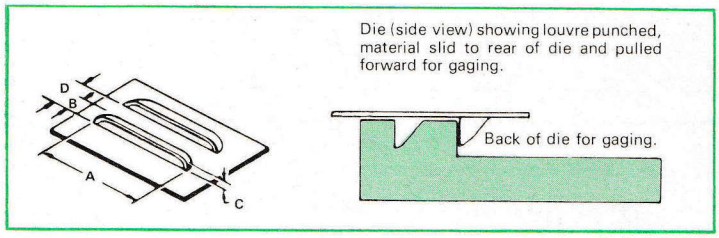

"A" Length of Louvre	"B" Depth of Louvre	"C" Height of Louvre	"D" Front to Front	Punch Number	Die Number	Die OD	Use Without Worktable	Use With Worktable
							Die Shoe	Die Adapter
1-1/2"	1/2"	3/16"	3/4"	8006-87910-25100	8006-87910-25901	1-15/16	091-026	091-308
2"	1/2"	3/16"	3/4"	8006-88910-25100	8006-88910-25901	2-7/16"	091-027	091-309

PIPE NOTCHING PUNCH AND DIE SET

Used to notch 2 equal sizes of pipe to make a right angle "T" joint. A punch and die is necessary for each size of pipe, however the die holder assembly can be used to hold the die for all sizes. Other sizes available — contact factory for price. Pipe notching die set cannot be used with worktable.

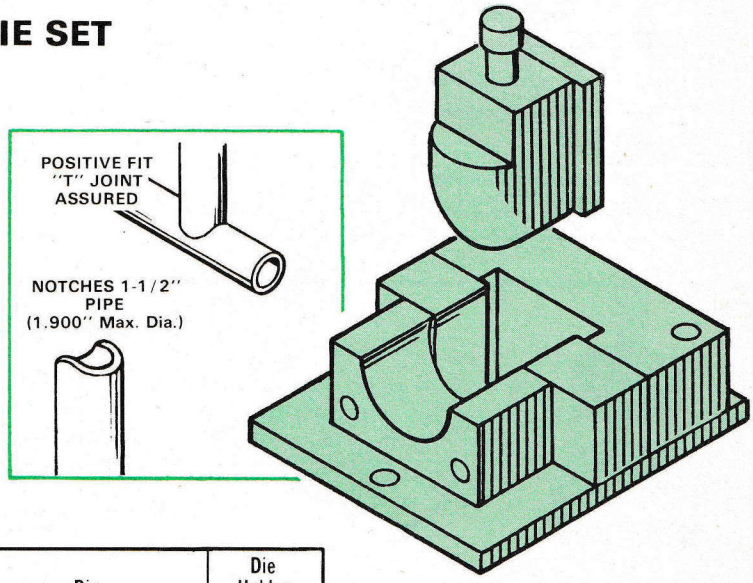

Nominal Pipe Size	Outside Pipe Diameter	Pipe Wall Thickness	Punch Number	Die Number	Die Holder Assy. No.
3/4"	1.050	.113	8001-10910-15000	8006-61910-15209	091-170
1"	1.315	.133	8003-74910-15000	8005-94910-15209	091-170
1-1/4"	1.660	.140	8002-36910-15000	8002-37910-15209	091-170
1-1/2"	1.900	.145	8005-93910-15000	8005-95910-15209	091-170

Tooling for No. 91 Series Bench Presses (cont'd.)

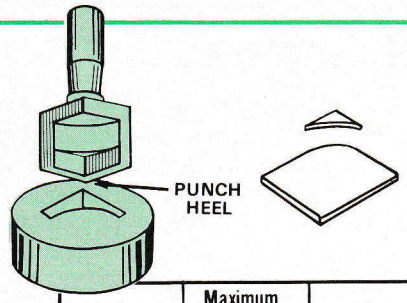

CORNER ROUNDING PUNCH AND DIE

Used to round corners on sheet and plate material. The heel of the punch acts as a gage and a punch guide to eliminate rapid tool wear. Please specify type and thickness of the material to be punched when ordering. Use wide strippers.

Size of Radius	Maximum Thickness of Material	Punch Number	Die Number	Use Without Worktable	Use with Worktable
				Die Shoe	Die Adapter
1/8"	14 Ga.	8007-49911-80100	8007-49911-80221	091-025	091-307
3/16"	10 Ga.	8004-66911-80100	8004-66911-80221	091-025	091-307
1/4"	10 Ga.	8002-98911-80100	8002-98911-80221	091-025	091-307
3/8"	3/16	8005-90911-80100	8005-90911-80221	091-025	091-307
1/2"	1/4	8008-88911-80100	8008-88911-80221	091-026	091-308
3/4"	1/4	8002-47911-80100	8002-47911-80221	091-026	091-308
1"	1/4	8008-71911-80100	8008-71911-80231	091-027	091-309

SLOTTING PUNCH AND DIE

Used for making large cutouts in sheet stock. Note square guide used to make square corners. Punch guide also locates in preceding slot to assure smooth cut. No starting hole is required for this punch. Please specify gage and material thickness to avoid undue delay in delivery. Use wide strippers.

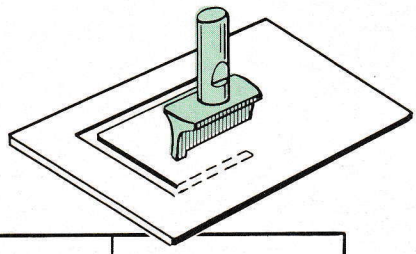

Width	Length	Punch Number	Die Size	Die O.D.	Use Without Work Table	Use With Worktable
					Die Shoe	Die Adapter
1/8"	1-1/4"	8006-84910-13100	1/8 x 1-1/4	1-15/16	091-026	091-308
3/16"	1-1/2"	8008-87910-13100	3/16 x 1-1/2	2-7/16	091-027	091-309
1/4"	1-5/8"	8009-78910-13100	1/4 x 1-5/8	2-7/16	091-027	091-309
5/16"	1-3/4"	8009-50910-13100	5/16 x 1-3/4	2-7/16	091-027	091-309
3/8"	1-7/8"	8003-99910-13100	3/8 x 1-7/8	2-7/16	091-027	091-309
7/16"	1-7/8"	8009-51910-13100	7/16 x 1-7/8	2-7/16	091-027	091-309
1/2"	1-7/8"	8010-09910-13100	1/2 x 1-7/8	2-7/16	091-027	091-309

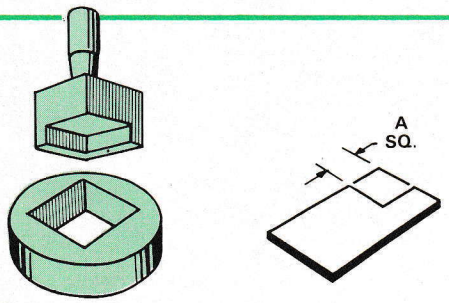

CORNER NOTCHING PUNCH AND DIE

The punch heel guides the punch into the die eliminating rapid tool wear as well as acting as a work piece gage. Dimension "A" (maximum size of notch) is a guide only as these punches can be built in any size up to the maximum shown. Please specify type and thickness of the material to be punched when ordering. Use wide strippers.

"A" Maximum Size of Notch	Punch Number	Die Number	Die O.D.	Use Without Worktable	Use With Worktable
				Die Shoe	Die Adapter
3/4"	8008-89910-31100	9112-09090	1-15/16	091-026	091-308
1-1/8"	8001-28910-31100	9112-12840	2-7/16	091-027	091-309

TRIM AND PART PUNCH AND DIE

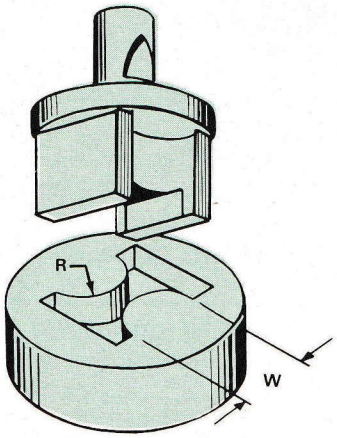

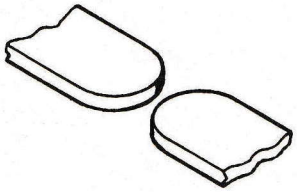

Trimming and parting sets are used to cut off strip steel and at the same time trim both ends with a smooth radius. Two punch guides enter the die before the cutting and trimming operation begins. This holds the punch in line with the die assuring straight cuts and prolonging tool life. Uses wide strippers.

Dimension "W"	Radius "R"	Maximum Thickness Mild Steel	Punch Number	Die Number	Die O.D.
1/2"	9/32	1/4	8013-86910-67100	8013-86910-67221	1-15/16
1"	17/32	1/8	8003-37916-67120	8003-37910-67231	2-7/16

ELECTRICAL KNOCKOUT PUNCH AND DIE SETS

The electrical knockout punch and die set partially punches out the slug leaving it held by one or two tabs (specify which type is desired when ordering). The slug can be removed when wanted by tapping with a screw driver. Set is designed for 18 gage thru 14 gage steel. Please specify type and thickness of the material to be punched to determine clearance and whether one or two tabs are desired. Uses wide strippers.

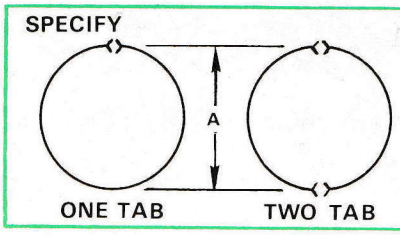

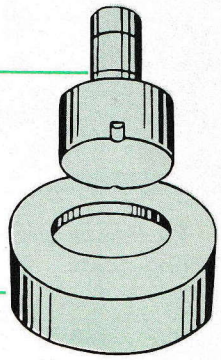

Pipe Size	"A" Diameter	Punch Number	Die Number	Die O.D.	Use Without Worktable	Use With Worktable
					Die Shoe	Die Adapter
1/2"	7/8"	8008-61911-50110	8008-61911-50222	1-3/16	091-025	091-307
3/4"	1-1/8"	8009-07911-50120	8009-07911-50222	1-15/16	091-026	091-308
1"	1-3/8"	8004-21911-50120	8004-21911-50222	1-15/16	091-026	091-308
1-1/4"	1-11/16	8000-89911-50120	8000-89911-50232	2-7/16	091-027	091-309

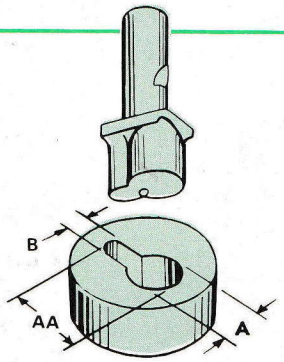

KEYHOLE PUNCH AND DIE

Keyholes allow assembly without removing the screw. Applications such as adjustable shelving, are one of the uses of this punch and die. The sizes shown will take standard pan head screws, round head screws and sheet metal screws. Please specify type and thickness of the material to be punched. Use narrow strippers on #6-#10 and #12-1/4" screw size and wide strippers on the 5/16" size.

Size of Screw	"AA"	"A"	"B"	Punch Number	Die Number	Die O.D.	Use Without Worktable	Use With Worktable
							Die Shoe	Die Adapter
#6–#10	5/8"	13/32"	13/64"	8008-94910-20110	8005-94910-20212	1-3/16	091-025	091-307
#12-1/4"	7/8"	17/32"	9/32"	8010-31910-20110	8010-31910-20222	1-3/16	091-025	091-307
5/16"	1"	21/32"	11/32"	8013-50910-20120	8013-50910-20222	1-15/16	091-026	091-308

Portable Hydraulic Presses

TAKE THE PRESS TO THE WORK!

5 ton through
30 ton punching capacities

- Increases production — reduces material handling costs
- Use on "I" beams, channels, angle iron, plates and wide flange beams
- Punch round, square, obround, rectangular holes
- Quiet, smooth operation
- Quick set-up and easy tool changeover
- Complete control of ram at all times

Piercing is one of the least expensive ways of making holes in structurals. Hydraulic piercing does not fracture or set up internal stress or cracks in the metal as some mechanical type punches do. You save valuable time and material handling costs by taking the press to the work. Many of these portable presses are lightweight enough to be easily handled by a single worker. Ideal for punching operations on site or for parts that must be assembled prior to punching. Many fabricators have created mobile work centers by mounting a hydraulic press and the power unit on two or four wheeled carts. Since the unit can be moved to an "out of the way position", valuable floor space is made available. A rocker-type control switch allows the operator to inch or jog the tooling onto the exact layout mark as required.

The Series 700 and 701 Hydraulic Presses include an adjustable ring type stripper, a standard coupling nut and a 700-T-1/2A Hydraulic Power Unit with 12' long hose and control wire assembly. (Punches and dies are not included.)

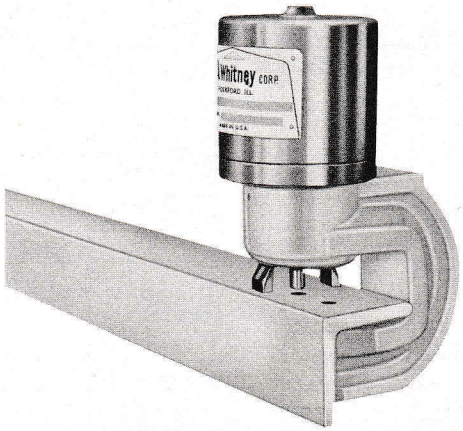

Series 700 Portable Flange Presses

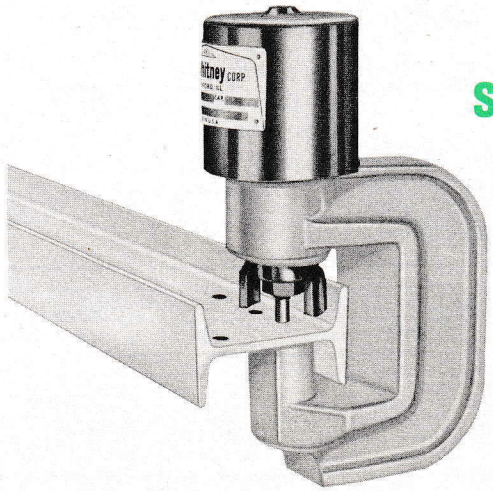

Series 701 Portable Web Presses

HOW TO SELECT THE CORRECT PRESS CAPACITY TO MEET YOUR REQUIREMENTS

When using a portable press for single hole punching, refer to the charts below to determine the amount of force (tonnage) required to punch a given hole.

For punching materials with a different shear strength than 60,000 PSI as listed in the tonnage charts, it is necessary to use a multiplier for calculating the proper amount of force required to punch the hole.

EXAMPLE

To punch a 13/16" diameter hole through 1/4" material, the pressure required (from the chart below) is 19.1 tons. If this material is stainless steel, with a shear strength of 70,000 PSI, the correct multiplier to use is 1.17 — therefore: 19.1 tons x 1.17 = 22.4 tons, actual force required.

Recommended press size: 30 ton series.

TONS PRESSURE REQUIRED TO PUNCH ASTM-A36 STRUCTURAL STEEL (60,000 PSI — Shear Strength)

Metal Gage	Thickness in Inches	Hole Diameter in Inches																							
		1/8	3/16	1/4	5/16	3/8	7/16	1/2	9/16	5/8	11/16	3/4	13/16	7/8	15/16	1	1-1/16	1-1/8	1-3/16	1-1/4	1-5/16	1-3/8	1-7/16	1-1/2
1/8 or 11	0.120	1.4	2.1	2.8	3.5	4.2	4.9	5.7	6.4	7.1	7.8	8.5	9.2	9.9	10.6	11.3	12.0	12.7	13.4	14.1	14.8	15.6	16.3	17.0
10	0.135	1.6	2.4	3.2	4.0	4.8	5.6	6.4	7.2	7.9	8.7	9.5	10.3	11.1	12.0	12.7	13.5	14.3	15.1	15.9	16.7	17.5	18.3	19.1
3/16	0.187	2.2	3.3	4.4	5.5	6.6	7.7	8.8	9.9	11.0	12.1	13.2	14.3	15.4	16.5	17.6	18.7	19.8	20.9	22.0	23.1	24.2	25.4	26.4
1/4	0.250	2.9	4.4	5.9	7.4	8.8	10.3	11.8	13.2	14.7	16.2	17.7	19.1	20.6	22.1	23.6	25.0	26.5	28.0	29.5				
5/16	.312		5.5	7.3	9.2	11.0	12.9	14.7	16.5	18.4	20.2	22.1	24.0	25.7	27.6	29.4								
3/8	0.375			8.8	11.0	13.3	15.5	17.7	19.9	22.1	24.3	26.5	28.7											
1/2	0.500					17.7	20.6	23.6	26.5	29.4														
5/8	0.625							29.5																

- 5 TON CAPACITY PRESS
- 10 TON CAPACITY PRESS
- 20 TON CAPACITY PRESS
- 30 TON CAPACITY PRESS
- 30 TON CAPACITY PRESSES WITH MODIFIED SLUG HOLE (See page 24)

Type of Material	Shear Strength PSI	Chart Multiplier
Aluminum, 1/2 hard sheet	19,000	.32
Copper, rolled	28,000	.47
Brass, 1/2 hard sheet	35,000	.58
Structural ASTM-A7	50,000	.83
Boiler Plate	55,000	.92
Structural Cor-Ten (ASTM-A242)	66,000	1.10
Steel, 50 Carbon	70,000	1.17
Steel, Stainless (18-8)	70,000	1.17
Steel C 40/C 45	75,000	1.26
Steel inox	84,000	1.40
Structural T-1	90,000	1.50

MODEL 700-T-½A PORTABLE HYDRAULIC POWER UNIT

- LIGHTWEIGHT — PORTABLE
- OPERATES PRESSES UP THRU 30 TONS

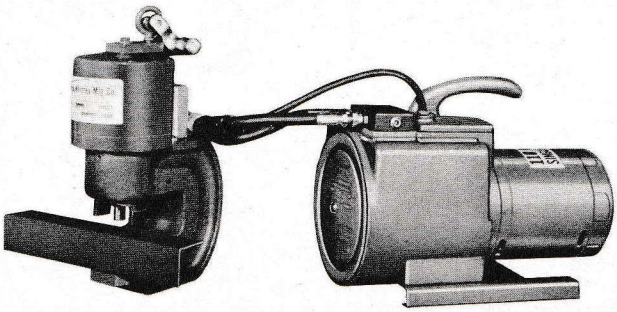

These lightweight power units are built to rigid specifications and are used primarily for single hole punching operations with all presses up thru 30 tons capacity.

P.S.I. Operating Pressure, Maximum	5000
Pump Output — '0' P.S.I. 5000 P.S.I.	145 Cu. In. Per Min. 38 Cu. In. Per Min.
Reservoir Capacity, Gallons	1
Hydraulic Oil — 30° to 150° F.	Gulf Harmony 43AW
Oil Filter	Cartridge — Paper
Drip-Proof Motor, 1800 R.P.M.	1/2 H.P., 115 volt, 60 hz, single phase
Voltage, Control	115 volt
Motor Starter	Rocker switch (Reversible motor)
Hoses	1/4" NPT — male ends 1/4" ID 12' long max.
Dimensions, width, depth, height	16-1/4" x 9" x 9"
Weight (with oil)	51 lbs.

Portable Hydraulic Presses (cont'd.)

DIMENSIONAL SPECIFICATIONS/LIMITATIONS

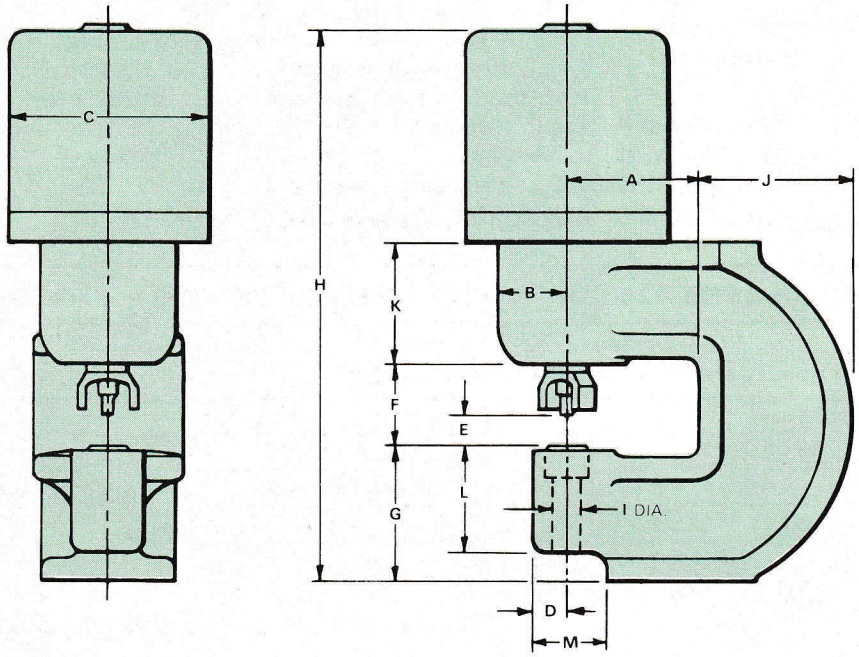

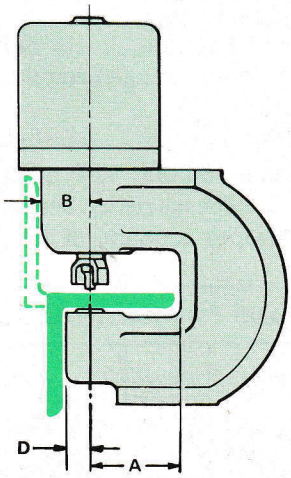

ANGLE IRON
AND FLAT STOCK

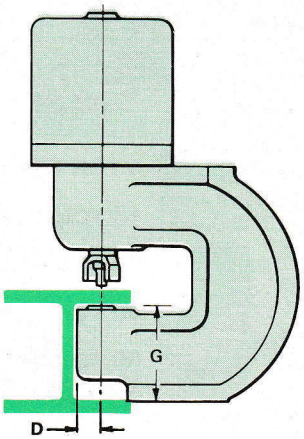

WIDE FLANGE BEAMS

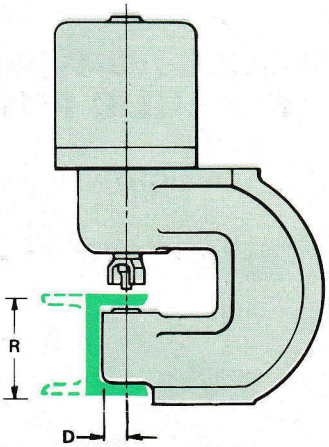

AMERICAN STANDARD
"I" BEAMS
AND CHANNELS

Series 700 FLANGE PRESSES

Press Model No.	705	710	710CC	720	720X6	730	730CC	730X8	730X8CC
Weight	14 lbs.	23 lbs.	23 lbs.	36 lbs.	77 lbs.	70 lbs.	70 lbs.	130 lbs.	130 lbs.
Capacity (tons)	5	10	10	20	20	30	30	30	30
Ram Stroke	5/8	7/8	7/8	7/8	7/8	7/8	7/8	7/8	7/8
Cycle Time (seconds)	1.7	4.1	4.1	9.3	9.3	14.8	14.8	14.8	14.8
Throat Depth A	2-1/4	2-1/4	2-1/4	2-1/4	6	3-1/8	3-1/8	8	8
B	1-1/8	1-1/4	1-1/4	1-5/8	1-9/16	1-15/16	1-15/16	2-1/8	2-1/8
C	2-7/8	3-1/2	3-1/2	4-1/2	4-1/2	5-1/2	5-1/2	5-1/2	5-1/2
D	15/32	11/16	15/32	11/16	11/16	1-1/8	11/16	1-1/8	11/16
E	7/16	19/32	19/32	5/8	5/8	21/32	21/32	21/32	21/32
F	1-3/16	1-7/16	1-7/16	1-7/16	1-7/16	1-7/8	1-7/8	1-7/8	1-7/8
G	2-3/16	2-5/16	2-5/16	2-1/2	3-3/4	3-1/4	3-1/4	5-1/4	5-1/4
H	8-3/8	10-1/16	10-1/16	10-5/8	11-7/8	11-7/8	12-11/16	15-3/8	15-3/8
I	19/32	7/8	19/32	7/8	7/8	1-1/4	7/8	1-1/4	7/8
J	2-3/8	2-1/2	2-1/2	2-3/4	5	4-1/8	4-1/8	5-1/4	5-1/4
K	1-3/4	2-1/8	2-1/8	2-1/4	2-1/4	2-3/4	2-3/4	3-1/2	3-1/2
L	1-3/4	1-7/8	1-7/8	1-7/8	2-1/8	2-11/16	2-11/16	3-1/8	3-1/8
M	3/4	1-3/8	1-1/8	1-1/4	1-5/8	1-7/8	1-7/16	2-3/16	1-11/16
R	3	3	3	3	3	4	4	4	4
Press Part No.	705-000	710-000	710-162	720-000	720-044	730-000	730-020	730-019	805-930

"D" dimension, plus material thickness, equals minimum gage dimension.

DIMENSIONAL SPECIFICATIONS/LIMITATIONS

Series 701
WEB PRESSES

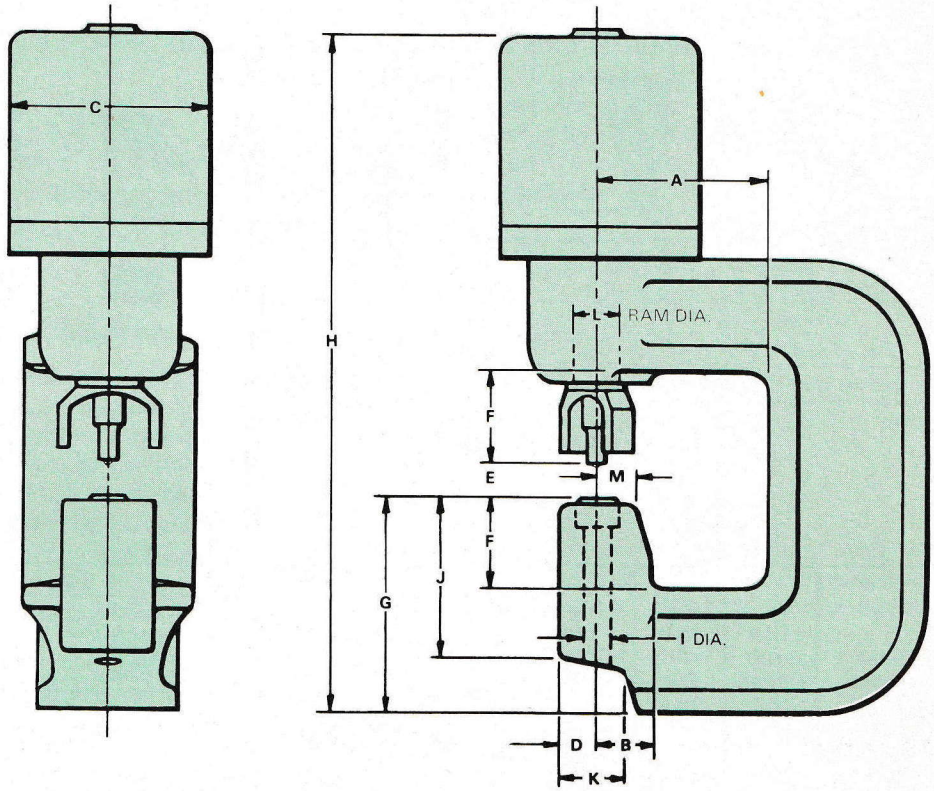

Press Model No.	721	731
Weight	58 lbs.	124 lbs.
Capacity (tons)	20	30
Ram Stroke	7/8	7/8
Cycle Time (seconds)	9.3	14.8
Throat Depth A	2-3/4	4-1/4
B	1	1
C	4-1/2	5-1/2
D	11/16	11/16
E	5/8	5/8
F	1-5/8	2-5/8
G	4-1/2	6-3/8
H	13-11/16	18-3/16
I	7/8	7/8
J	3-3/16	4-3/8
K	1-3/8	1-3/4
L	1-3/4	2-3/8
M	3/4	3/4
R	4	5
S	1	1-1/2
T	5-1/2	8-1/2
U	3-1/2	5-1/2
V	1-5/8	1-15/16
Press Part No.	721-000	731-000

"D" or "M" dimension, **plus** material thickness, equals minimum gage dimension.

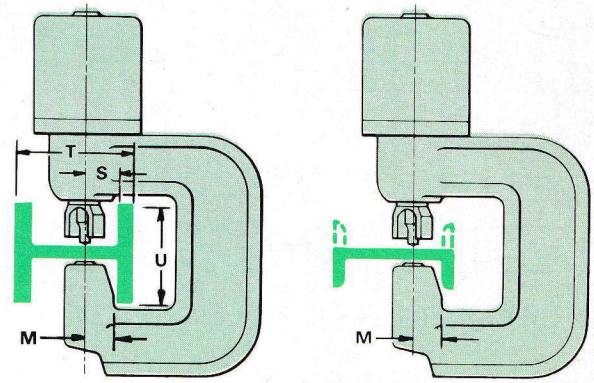

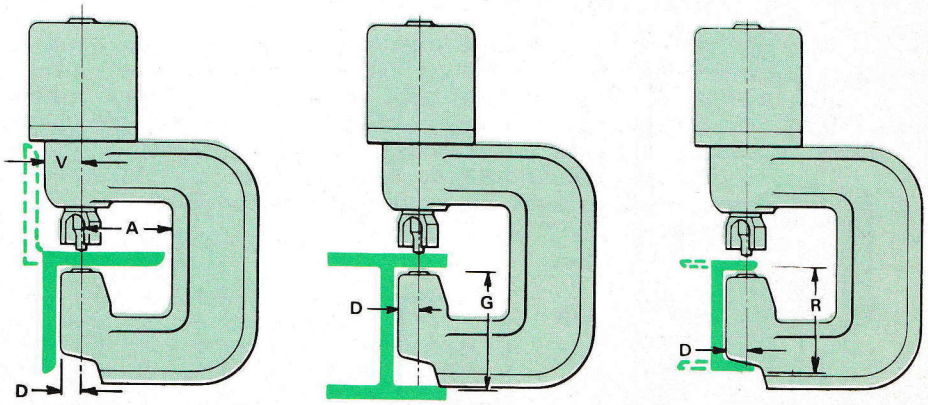

ANGLE IRON / FLAT STOCK

WIDE FLANGE BEAMS

AMERICAN STANDARD "I" BEAMS / CHANNELS

Portable Hydraulic Presses (cont'd.)

TOOLING FOR SERIES 700/701 PRESSES

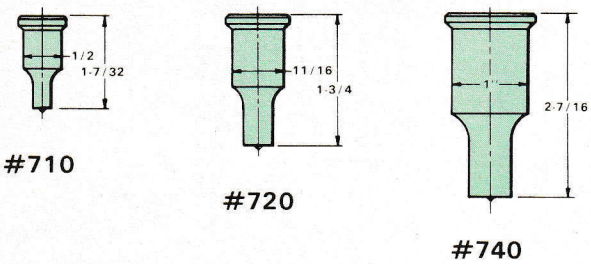

PUNCH SELECTION

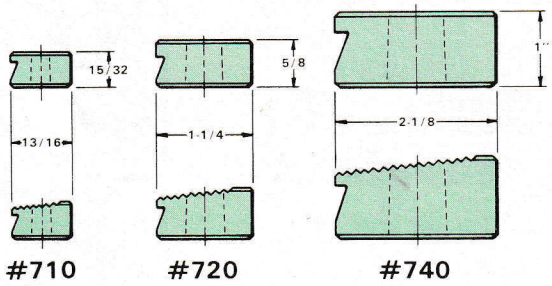

DIE SELECTION

Press Model No.	Use with Punch Style	Use with Die Style	Use with Coupling Nut Style	PUNCH & DIE SIZE (in 1/32" increments) ROUND From	ROUND Thru	SQUARE From	SQUARE Thru	OBROUND "A" dim. From	OBROUND "A" dim. Thru	RECTANGLE "A" dim. From	RECTANGLE "A" dim. Thru
705	710	710	Standard	3/32	1/2	1/8	11/32	3/16	1/2	3/16	1/2
			Split	17/32	9/16	23/64	3/8	17/32	9/16	17/32	9/16
710 720 720X6 721	720	720	Standard	1/8	11/16	3/16	15/32	3/16	11/16	3/16	11/16
			Split	23/32	13/16	1/2	9/16	23/32	13/16	23/32	13/16
710CC	720	710	Standard	1/8	9/16	1/8	3/8	3/16	9/16	3/16	9/16
730 730X8	740	740	Standard	7/32	1	1/4	11/16	1/4	1	1/4	1
			Split	1-1/32	1-1/2	3/4	1	1-1/8	1-1/2	1-1/8	1-1/2
730CC 730X8CC 731	740	720	Standard	7/32	13/16	3/16	9/16	3/16	13/16	3/16	13/16

INCREASING SLUG HOLE CAPACITY

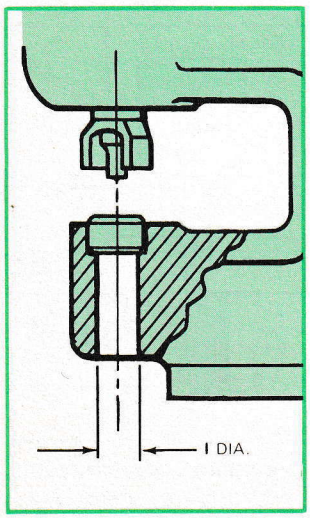

To increase the hole capacity of the presses listed below, it is necessary to enlarge the diameter of the slug hole. The maximum hole capacities shown in the Specifications chart for each press will accommodate approximately 90% of most structural steel punching. If a larger hole is desired, certain models of portable presses can be modified as shown in the chart below.

CAUTION:
Increasing the diameter of the slug hole will materially shorten the life of the press. This factor should be taken into consideration when ordering a press with slug hole modification.

Press Model Number	Standard Max. Die Dia.	Standard I Dia.	Modified w/o Heat Treat Max. Die Dia.	Modified w/o Heat Treat I Dia.	Modified Press Part Number
730	1-3/16	1-1/4	1-1/2	1-5/8	809-571
730X8	1-3/16	1-1/4	1-1/2	1-5/8	809-904

BEVEL SERRATED DIES

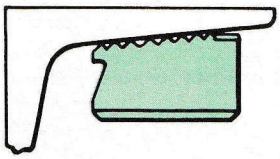

Bevel serrated dies are used when punching flanges of "I" Beams or channels which are tapered, such as American Standard Channels and "I" Beams.

STRIPPER SELECTION

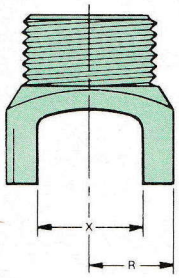

Adjustable ring stripper

An adjustable ring stripper is included as standard on all press models. These are adjustable to the thickness of material being punched. In order for the punch to strip properly, both legs of the stripper must be resting solidly on the piece part.

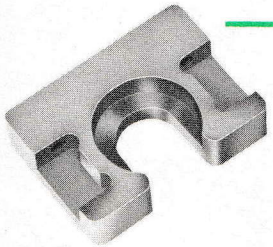

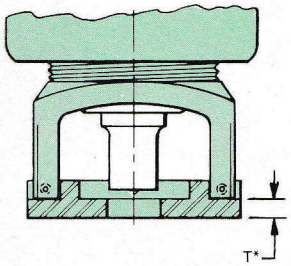

Bridge Stripper

If a hole to be punched is near the edge of the part and both legs of the standard adjustable ring stripper cannot contact the material, it is necessary to use a bridge stripper. This stripper should also be used for thin materials that could become deformed by the stripping force. It can be easily attached to the bottom of a ring stripper with set screws.

*** Caution:** The use of a bridge stripper will reduce the thickness of material that can be punched by the amount "T" as shown in the chart. For application, please contact the Proposal Dept. of W. A. Whitney Corp.

PRESS MODEL NO.	RING STRIPPER				USE WITH BRIDGE STRIPPER NO.	T* (thickness of bridge)
	PART NO.	X (across flats)	R (radius)	WIDTH		
705	705-014	1-3/32	13/16	5/8	705-017	9/64
710 710CC	710-077	1-17/32	1	7/8	710-094	1/4
720 720X6	720-012	1-25/32	1-1/4	7/8	721-004	1/4
730 730CC 730X8 730X8CC	730-011	2-13/32	1-5/8	1	731-010	1/4
721	721-003	1-25/32	1-1/4	7/8	721-004	1/4
731	731-006	2-13/32	1-5/8	1	731-010	1/4

DIE CLEARANCE

Be sure to allow for proper punch and die clearance. The standard clearance of the die styles used with the series 700 and 701 presses is .020 over nominal. The difference between punch and die diameter should be approximately 15% of the material thickness. Consult factory for recommended die clearances for other materials.

ASTM – A36 STRUCTURAL STEEL	
MATERIAL THICKNESS	DIE CLEARANCE
1/8" thru 1/4"	Standard
1/4" thru 1/2"	1/32" Over Nominal
7/16" thru 5/8"	1/16" Over Nominal

SUSPENSION SPRING

Additional ease of movement is provided with a suspension spring. The spring allows an operator to "float" the press when locating to an exact layout mark.

PRESS MODEL NO.	721 730 730X8 730CC 730X8CC 731
Spring Part No.	700-377
Spring Capacity (Min. & Max. lbs.)	0-240
"L" Free Length	17"
"M" Length at Max. Load (approx.)	28"
Spring Rate (lb./In.)	20
"D" Outside Diameter	2-1/2"

REMOVAL OF PUNCH AND DIE

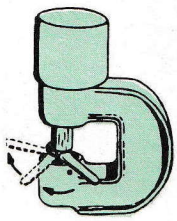

Removing Punch

Position coupling nut wrench on jaw of press and jog the punch down through the wrench until it engages the coupling nut. When punch and coupling nut are free, retract ram and remove from press.

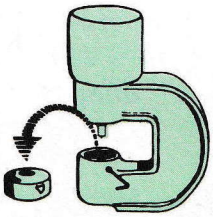

Removing Die

Loosen set screw and lift out die. A tight fitting die may be pushed out from the bottom through the slug hole.

Model 610-C Coper-Notcher-Bender Press

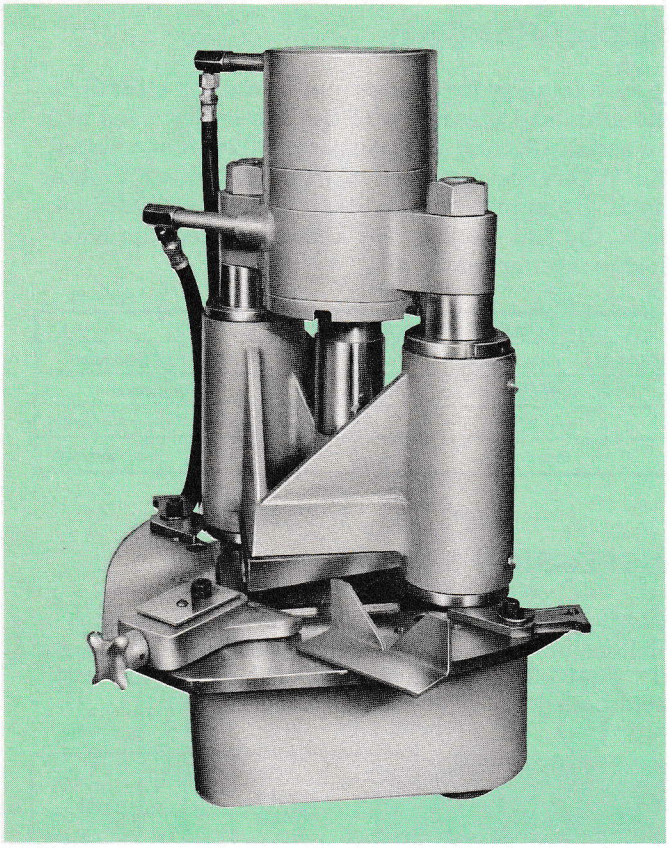

- Full 18 ton capacity throughout entire stroke
- Produces burr-free, non-distorted piece parts
- Eliminates secondary operations
- Up to 13 strokes per minute
- Jog to layout line
- Fast tool change from bending to square coping

MAXIMUM MATERIAL

4″ x 4″ x 1/4″ Angle
4″ x 1/4″ Flat Stock

DOUBLE SIDED VERSATILITY . . .

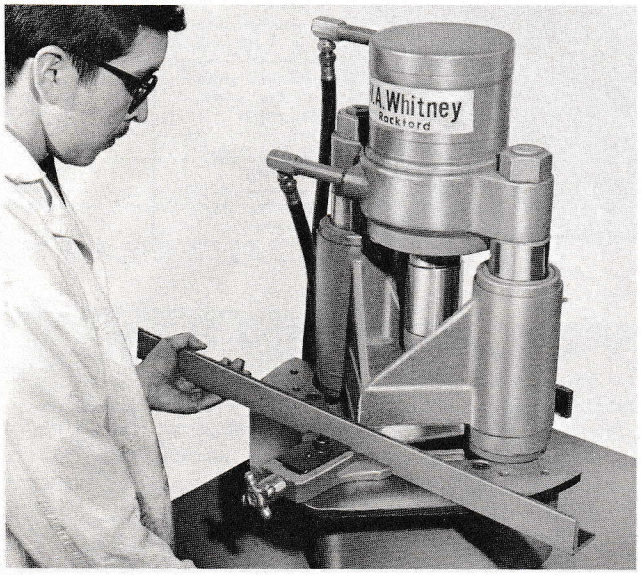

WITH ONE SIDE:

NOTCH 90° — 4″ deep

COPE — 5-1/2″x 5-1/2″ deep

MITRE — up to 45°

REVERSE MITRE — up to 45°

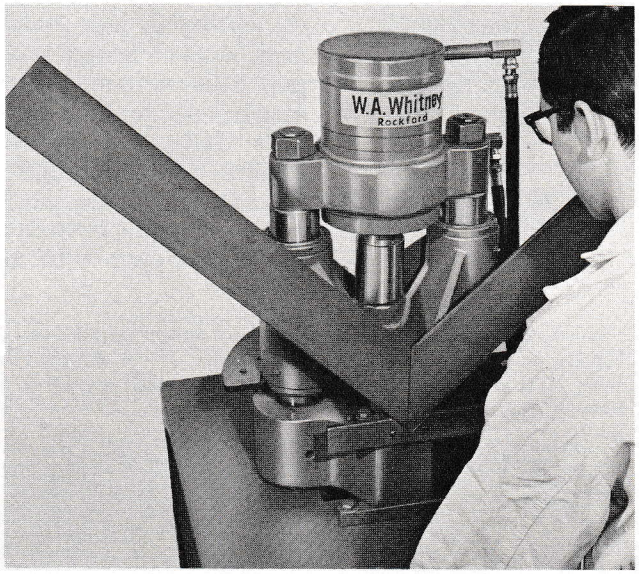

WITH THE OTHER SIDE:

COPE — 2″ wide x 4″ deep

BEND — up to 90°

(uses interchangeable tooling)

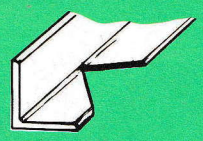

NOTCH

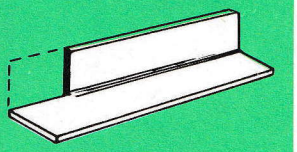

COPE

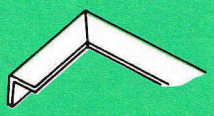

NORMAL BEND

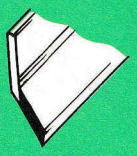

REVERSE MITRE

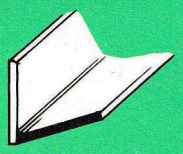

MITRE OR CLIP

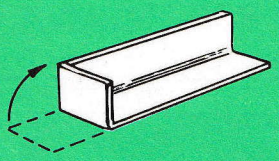

BEND

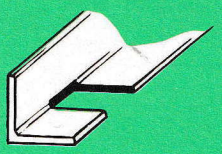

COPE LEG

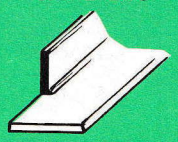

BLOCK LEG

Notch on one side . . .
Cope and Bend on the other . . .

THE FABRICATING INDUSTRY'S MOST VERSATILE MACHINE

Actually two machines in one! This hydraulically-powered double header will save you time and cut your fabricating costs. Ideal for metal fabricating shops, steel warehouses or plant maintenance functions.

All operations are performed accurately and smoothly with no burr, distortion or shock. This new modern concept is much preferable to the saw-type or torch-type cut, both of which produce less desirable conditions. Operator can achieve an accurate burr-free cut with a great reduction in set-up time, layout time, fitting and welding . . . and tremendous savings in shearing time.

The hydraulic power unit is equipped with a double-guarded footswitch that enables the operator to gage the piece part accurately. He can inch or jog the press to a scribed line or a punch mark with complete control.

Tonnage	18
Full Stroke	1-3/8″
Full Strokes per minute	12
Standard Clearance	.015-.020
Operating Pressure PSI	1500
"A" Height	30″
"B" Width	20″
"C" Depth	18-1/2″
"I" Stroke	1-3/8″
"J" Die Height Cope Die Height Bend	7-29/32″ 7-3/4″
Shipping Weight less power unit	450 lbs.

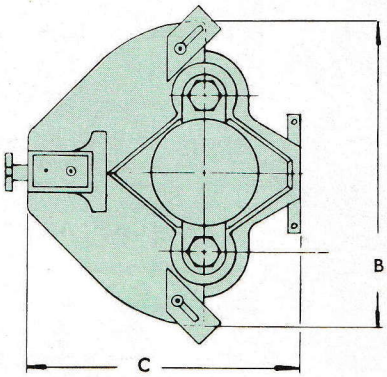

MAXIMUM MATERIAL . . .

4″ x 4″ x 1/4″ Angle
4″ x 1/4″ Flat Stock

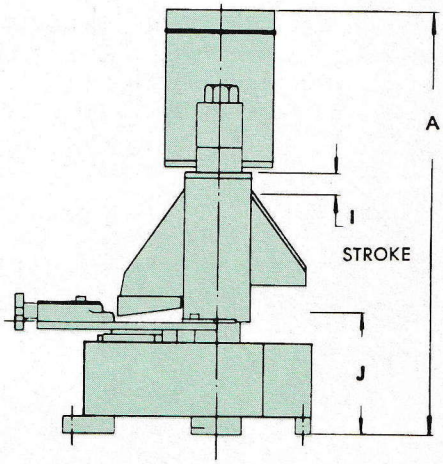

The Model 610-C Coper-Notcher-Bender Press includes a removable worktable and gage assembly, 90° notching and 90° forming tooling assemblies and a 600-S-3A-6FS Hydraulic Power Unit with 6′ long hoses and double guarded footswitch on 10′ electrical cord. (Coping tooling is an optional extra.)

Model 610-C Coper-Notcher-Bender Press (cont'd.)

TYPICAL WORK THAT CAN BE PERFORMED:

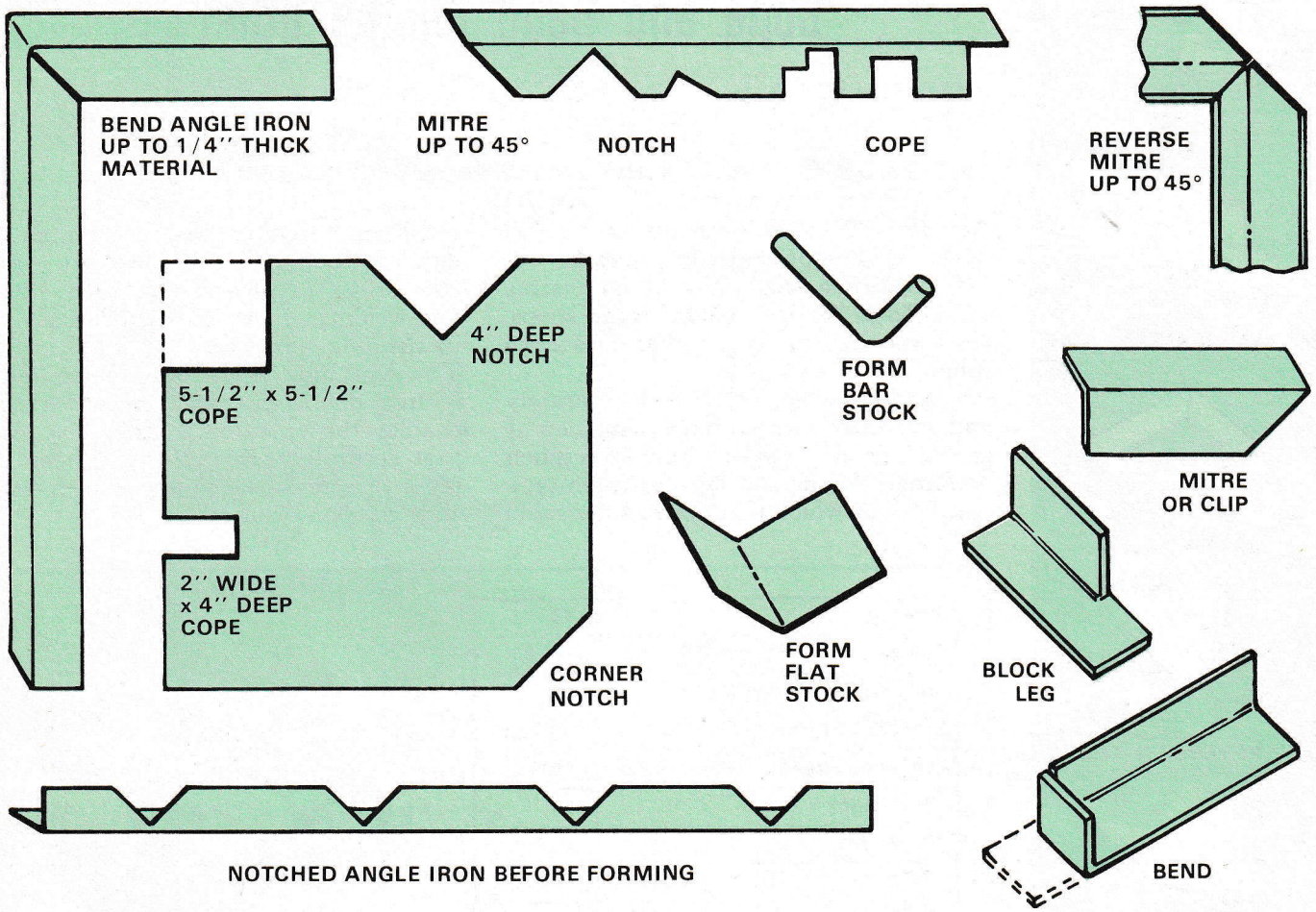

MODEL 600-S-3A-6FS HYDRAULIC POWER UNIT

The 600S-3A-6FS Hydraulic Power Unit is a 3 hp 1500 psi power unit with solenoid operated control valve and manual starter. The control valve is activated with a double guarded footswitch on 10' electrical cord.

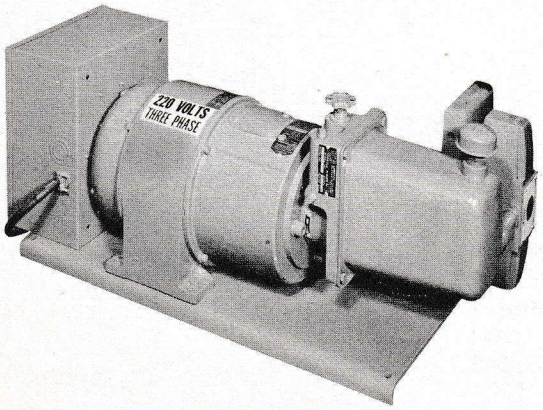

P.S.I. Operating Pressure	1500
Gallons Per Minute 'O' P.S.I. 1500 P.S.I.	3.6 3.0
Reservoir Capacity, Gallons	1
Hydraulic Oil . . . 30° to 150° F. 0° to 150° F.	Mobil DTE 24 Mobil Fluid 200
Oil Filter, Wire Mesh	Built-in
Valving	1/4" Solenoid
Drip-proof Motor, 1800 R.P.M., 230/460 volt, 60 hz, single-end shaft, F-2 assembly	3 H.P.
Control Voltage	115V
Motor Starter	Manual
Hose has NPT male end with same dimension as I.D., maximum 20' long	3/8" I.D.
Dimensions, width, depth, height	30-1/4 x 14-1/2 x 13-1/8"
Net weight	225 lbs.

WORK SETUP PROCEDURES

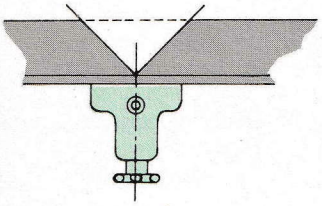

NOTCHING ANGLE IRON

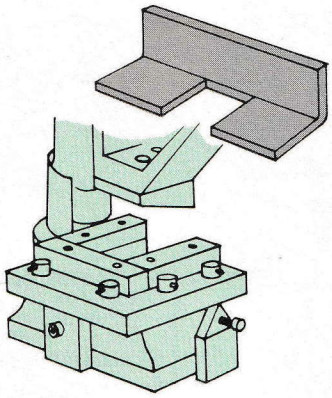

SQUARE COPING (Optional)

CORNER COPING ANGLE IRON

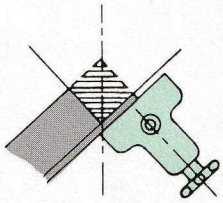

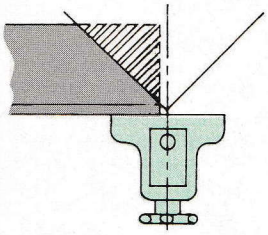

CLIPPING ANGLE IRON ENDS

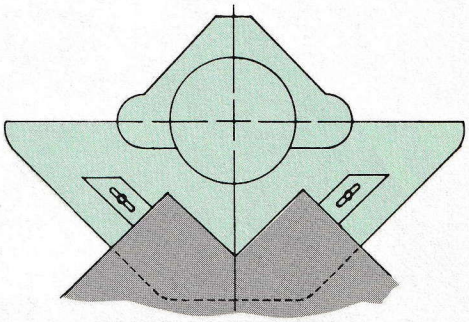

CORNER NOTCHING
Plate up thru 5-1/2″ x 5-1/2″

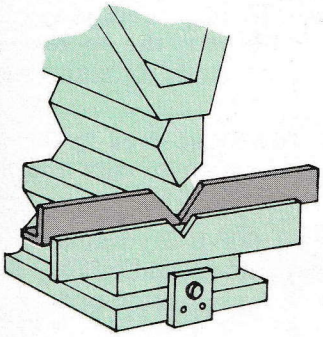

90° FORMING

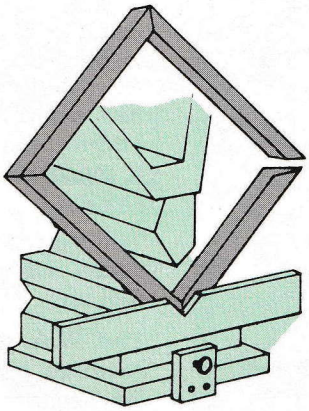

4 SIDES IN 3 BENDS AND 1 HANDLING

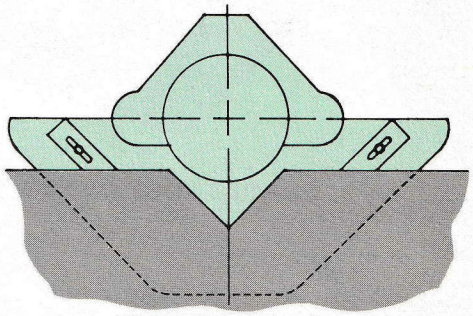

EDGE NOTCHING
Plate up thru 4″ deep

AWARENESS GUARDS

Guarding is the responsibility of the user; however, awareness guards as depicted are available as an optional accessory.

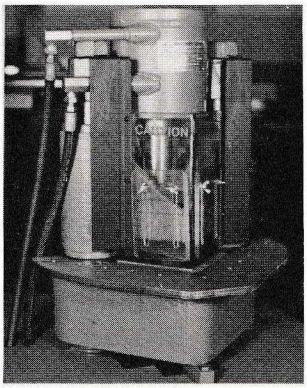

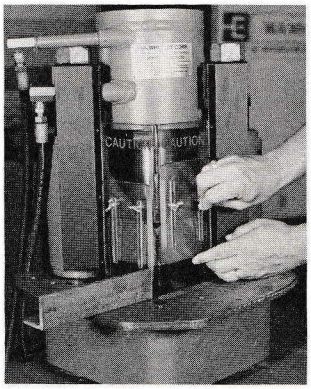

COPE — NOTCH SIDE

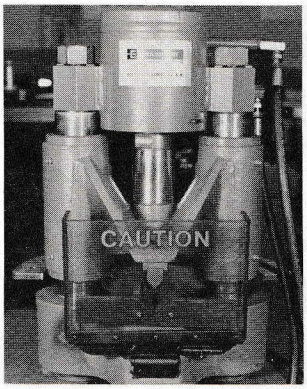

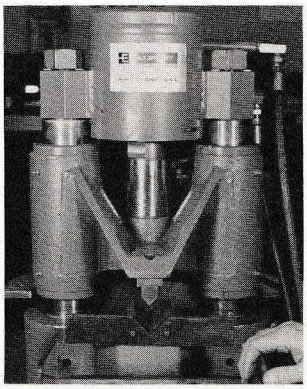

BEND SIDE

IDEAL FOR:

- STRUCTURAL STEEL FABRICATORS
- SIGN SHOPS
- ORNAMENTAL IRON SHOPS
- WELDING SHOPS
- PLANT MAINTENANCE CREWS
- STEEL WAREHOUSES

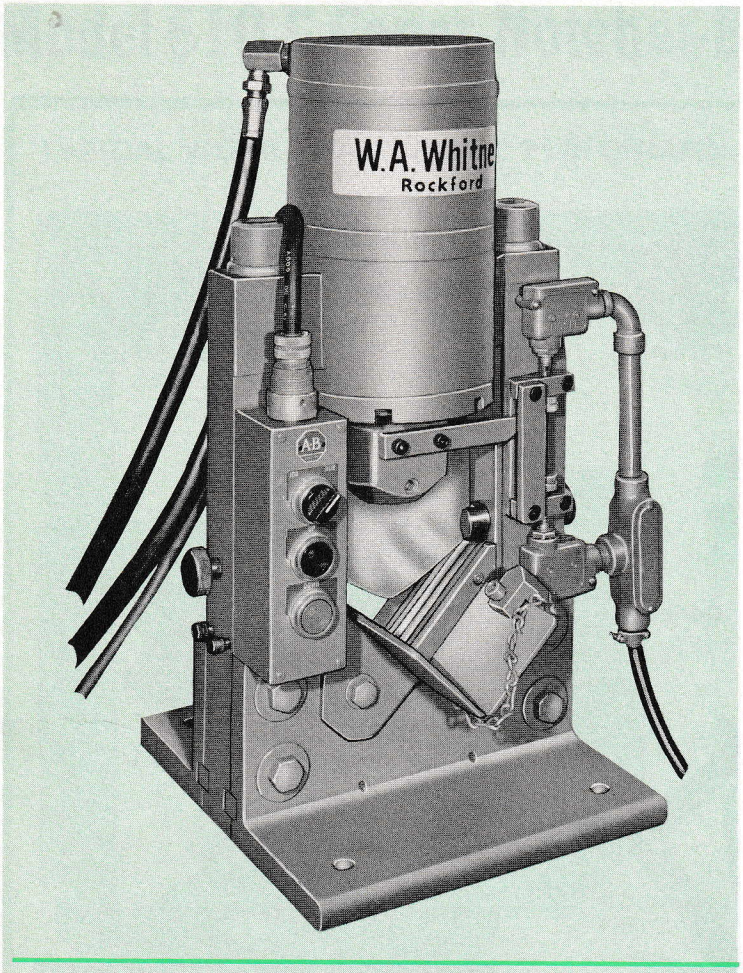

Model 606-B Hydraulic Shear

- Fully adjustable stroke
  - Non-distorted, burr-free cuts
- No clamping of material required
  - Full hydraulic power throughout entire stroke
- Economical and efficient

Shearing has long been accepted as the most effective means for cutting off metal as compared to sawing, abrasive cut-off, and torch cutting. The W. A. Whitney Model 606B Hydraulic Shear, with 18 ton capacity, will perform a variety of shearing operations with ease. These shears eliminate secondary operations since the shear cut is non-distorted, burr-free and square. And, this versatile machine can be tooled to shear angles, flats, channels, solid rounds, square tubing, notch pipe, bend and form. There is no shock as in the operation of a mechanical press, and no need for clamping or locking the part in position.

The very finest of tool steels are used in the precision shear blades to insure clean cuts and long tool life.

The W.A. Whitney Model 606-B Hydraulic Shear requires low capital investment and quickly pays for itself through increased production and elimination of secondary operations. After hydraulic shearing the stock does not have to be straightened or deburred. No clamping of material is required.

The hydraulic power unit permits the shear to be operated at full power throughout the entire stroke. The stroke is adjustable for various shapes and thicknesses of material being sheared.

SHAPES AND CAPACITIES

Based on bar stock—50,000 P.S.I. Shear Strength—Mild Steel
Based on ASTM-A36—60,000 P.S.I. Shear Strength—Structural Steel

ANGLE IRON single cut	2″ x 2″ x 1/8″
double cut	4″ x 4″ x 1/4″
double cut (45° mitre)	3″ x 3″ x 1/4″
SOLID SQUARE STOCK	5/8″
SQUARE TUBING	1″ (.062 Min. Wall)
FLAT STOCK single cut	2″ x 5/16″ through 4″ x 5/32″
double cut	6″ x 5/16″
ROUND BAR STOCK single cut	7/8″ dia. or equiv.
CHANNEL IRON double cut	Up through *1-3/4″ Bar Channel (9/16 max. flange)
90° FORMING flat stock	1/4″ thick x 6″ wide 5/16″ thick x 6″ wide
PIPE NOTCHING	3/4″ through 2″ (Schedule 40)

*Sheared in double cut angle iron die assembly

AWARENESS GUARDS

Guarding is the responsibility of the user; however, awareness guards as depicted are available as an optional accessory.

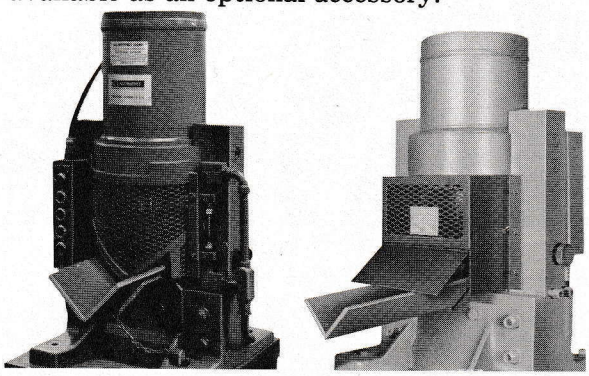

INFEED SIDE OUTFEED SIDE

The Model 606-B Shear includes a 606-S-3A-606 Hydraulic Power Unit with 6′ long hoses and a pushbutton control pendent station. (Tooling and awareness guards are optional extras.)

Tonnage	18
Stroke Adjustment	3/8″ to 1-13/16″
Strokes Per Minute	10
Cycle Time, seconds	2 to 6
Operating Pressure, P.S.I.	1500
Height	26″
Base Size	12″ x 14″
Net Weight	251 lbs.
Distance Between Columns	7″
Width of Die Cavity	2″
Blade Thickness	3/8″

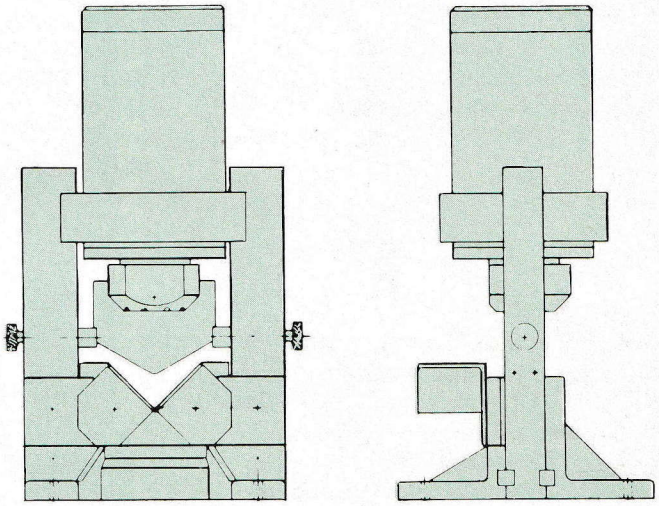

MODEL 600-S-3A-606 HYDRAULIC POWER UNIT

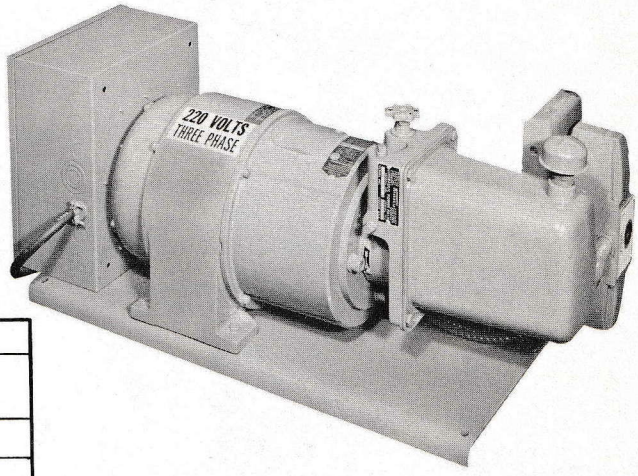

P.S.I. Operating Pressure	1500
Gallons Per Minute 'O' P.S.I. 1500 P.S.I.	3.6 3.0
Reservoir Capacity, Gallons	1
Hydraulic Oil . . . 30 to 150 F. 0 to 150 F.	Mobil DTE 24 Mobil Fluid 200
Oil Filter, Wire Mesh	Built-in
Valving	1/4″ Solenoid
Drip-proof Motor, 1800 R.P.M., 230/460 volt, 60 hz, single-end shaft, F-2 assembly	3 H.P.
Control Voltage	115V
Motor Starter	Manual
Hose has NPT male end with same dimension as I.D., maximum 20′ long	3/8″ I.D.
Dimensions, width, depth, height	30-1/4 x 14-1/2 x 13-1/8″
Net weight	225 lbs.

The 600S-3A-606 Hydraulic Power Unit is a 3 hp 1500 psi power unit with solenoid operated control valve, manual starter, and limit switch stroke controls for use on the 606 Shear. The control valve is activated with a pushbutton control pendent station mounted on the shear.

1/4″ Fab Center

SIMPLIFIES MATERIAL HANDLING!

- Convenient work height reduces operator fatigue
- Shock-free hydraulic actuation increases tool life
- Burr-free, non-distorted cuts

Their versatility, ease of operation, and reduced operating costs have made the 606-B Shear and 610-C Coper-Notcher-Bender Press favorites of fabricators throughout the world. Now, this formidable duo is combined with a Hydraulic Power Unit, sturdy work table and conveyor to provide a versatile fabricating tool. The 1/4″ Fab Center dramatically reduces angle iron fabricating costs and handling time. Shear, notch, mitre, reverse mitre, clip, cope, form 90° bends in all sizes of angle iron up through 4″ x 4″ x 1/4″ thick. The 5′ roller conveyor facilitates feeding of material. Additional conveyors, in 5′ and 10′ lengths, are also available.

The complete 1/4″ Fab Center package includes a 606-B Shear with a double cut angle iron die assembly; a 610-C Coper-Notcher-Bender Press with 90° notching and 90° forming tooling assemblies; a 600-S-3A-6FS Hydraulic Power Unit; 2-way selector valve; 6′ long hoses; double guarded footswitch on 10′ cord; welded machine base assembly; and a 5′ long "Vee" roller conveyor assembly.

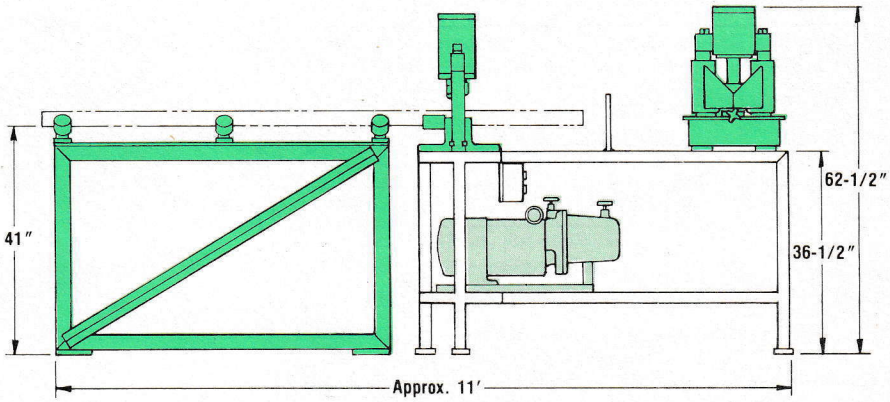

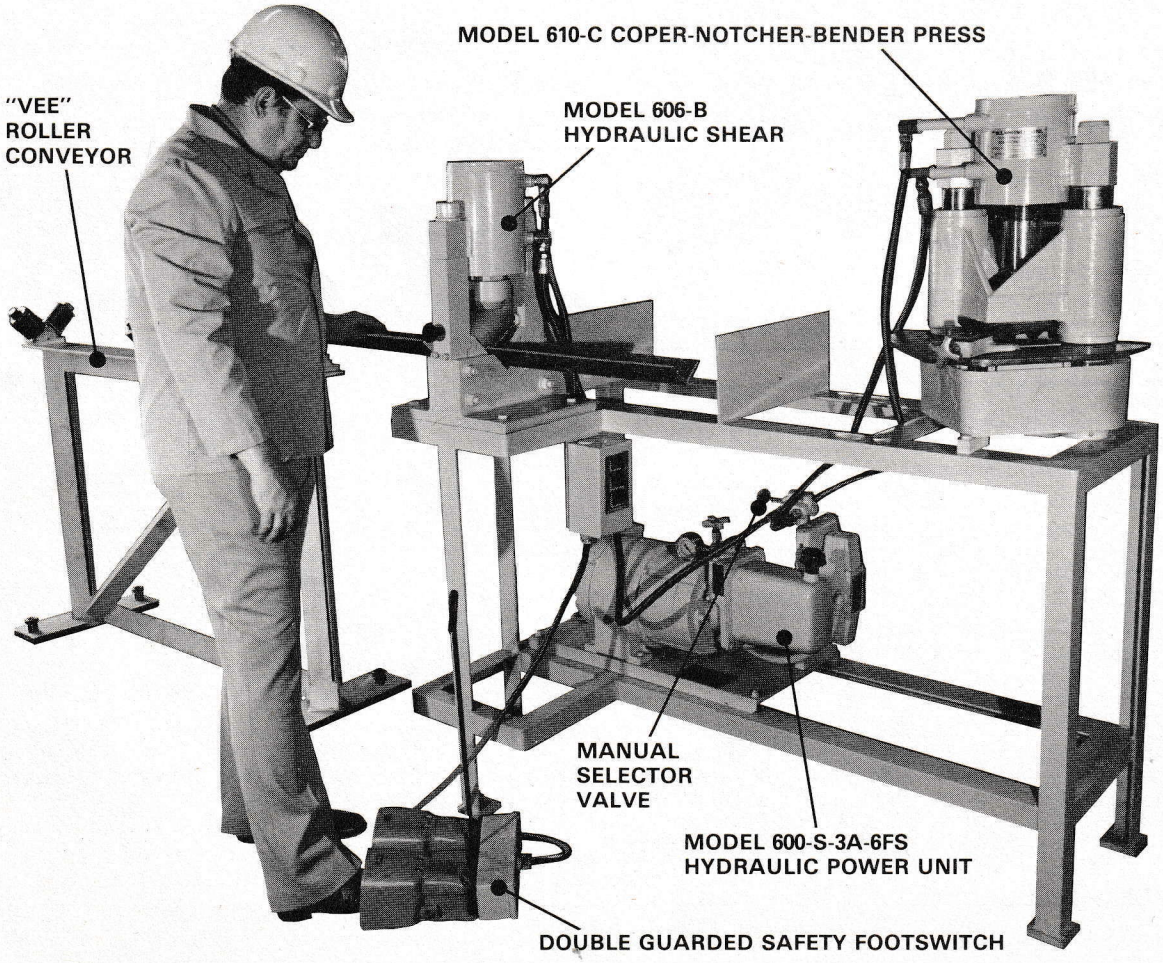

SHEAR, COPE, NOTCH, MITRE, REVERSE MITRE, BEND, FORM

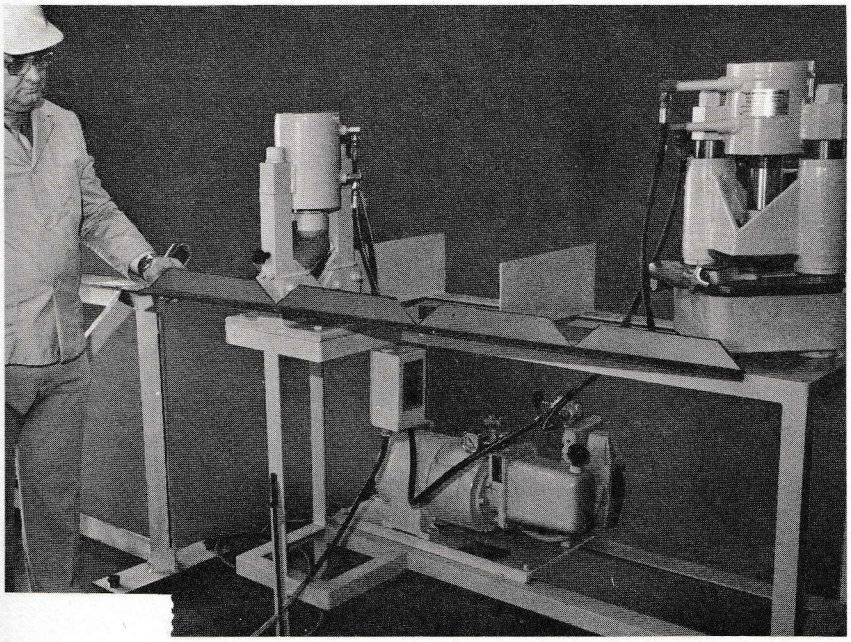

MODEL 606-B HYDRAULIC SHEAR

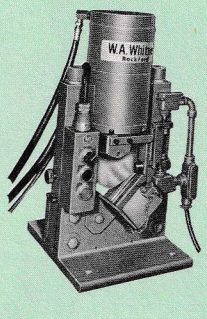

CAPACITIES (Based on ASTM-A36 structural steel—60,000 psi shear strength)

Angle Iron, double cut . . . 4″ x 4″ x 1/4″ max.
Angle Iron, single cut . . . 2″ x 2″ x 1/8″ max.
Flat Stock, double cut . . . 6″ x 5/16″ max.
Flat Stock, single cut . . . 2″ x 5/16″ through 4″ x 5/32″
Round Stock, single cut . . . 7/8″ dia. round or equiv.
90° Forming . . . 1/4″ thick x 6″ wide; 5/16″ thick x 6″ wide
Square Tubing . . . 1″ x 1″—.062 min. wall
Pipe Notching . . . 2″ max. Sched. 40
Solid Square Stock . . . 5/8″ max.

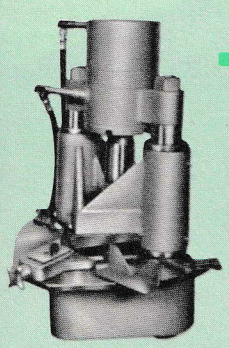

MODEL 610-C COPER-NOTCHER-BENDER

FRONT SIDE:

A. 90° Notching Tooling
Notch 90°—4″ deep
Cope—5-1/2″ x 5-1/2″ deep
Mitre—up to 45°
Reverse Mitre—up to 45°

BACK SIDE:

*B. 90° Bending Tooling
Bend up to 90°

*C. 2″ Wide x 4″ Deep
Cope Tooling
Notch 2″ Wide x 4″ Deep

*Interchangeable Tooling

Maximum Material 4″ x 4″ x 1/4″ Angle 4″ x 1/4″ Flat Stock

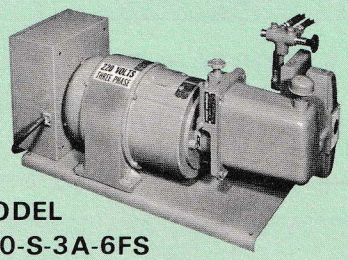

MODEL 600-S-3A-6FS HYDRAULIC POWER UNIT

This rugged-duty hydraulic power unit is performance matched for use with the 606-B Shear and 610-C Coper-Notcher-Bender combination. It has a field-proven record of dependable operation and built-in overload protection. It is a 3 hp, 1500 psi power unit with solenoid operated control valve and manual starter. The control valve is actuated with a double guarded footswitch on 10' electrical cord. A manual selector valve is provided to allow selective operation of either the Shear or the Coper-Notcher-Bender.

Mobile Fabricator

A COMPLETE WORKSHOP ON WHEELS!

The Mobile Fabricator is a versatile tool that goes anywhere in your plant . . . no waiting for stock to be transported to the machine. Capable of a wide variety of metal fabricating operations including piercing, coping, forming, mitering, pipe notching and shearing of angles, flats, rounds and channels. Comprised of three separate machines — a Hydraulic Shear, a versatile Coper-Notcher-Bender and a model 720 Portable Press that can be completely removed from the carrier cart to further extend its usefulness. Customers refer to this machine as an "ironworker on wheels".

3 SEPARATE MACHINES

- COPER-NOTCHER-BENDER
- HYDRAULIC SHEAR
- PORTABLE HYDRAULIC PRESS

2 HYDRAULIC POWER UNITS

- 3 HP UNIT
- PORTABLE 1/2 HP UNIT

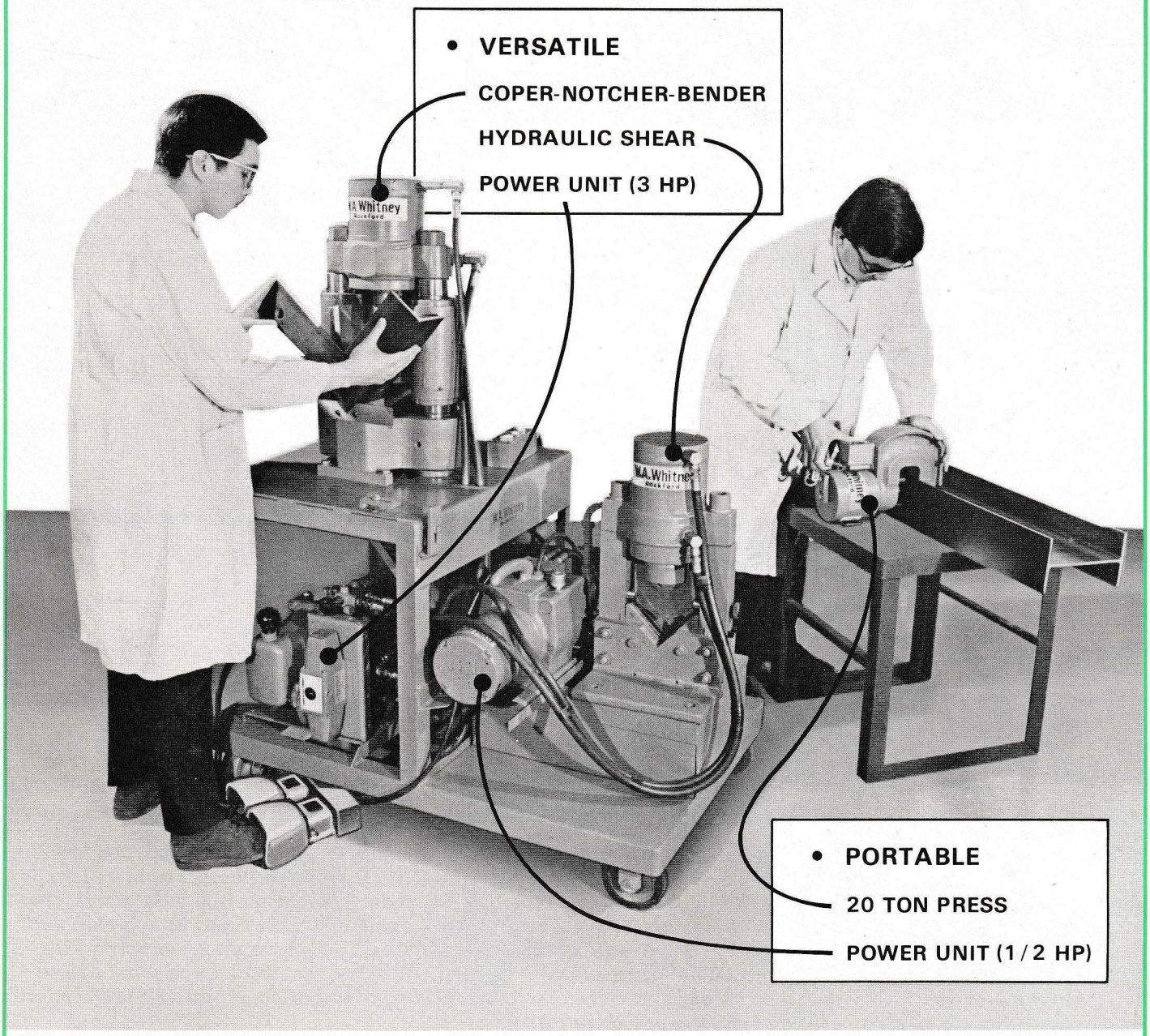

MODEL 606-B HYDRAULIC SHEAR

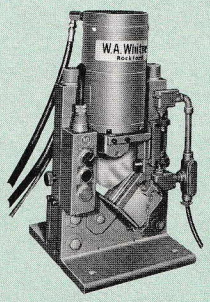

CAPACITIES (Based on ASTM-A36 structural steel—60,000 psi shear strength)

Angle Iron, double cut . . . 4″ x 4″ x 1/4″ max.
Angle Iron, single cut . . . 2″ x 2″ x 1/8″ max.
Flat Stock, double cut . . . 6″ x 5/16″ max.
Flat Stock, single cut . . . 2″ x 5/16″ through 4″ x 5/32″
Round Stock, single cut . . . 7/8″ dia. round or equiv.
90° Forming . . . 1/4″ thick x 6″ wide; 5/16″ thick x 6″ wide
Square Tubing . . . 1″ x 1″—.062 min. wall
Pipe Notching . . . 2″ max. Sched. 40
Solid Square Stock . . . 5/8″ max.

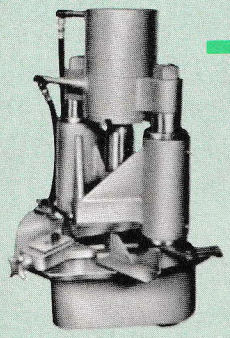

MODEL 610-C COPER-NOTCHER-BENDER

FRONT SIDE:

A. 90° Notching Tooling
Notch 90°—4″ deep
Cope—5-1/2″ x 5-1/2″ deep
Mitre—up to 45°
Reverse Mitre—up to 45°

BACK SIDE:

*B. 90° Bending Tooling
Bend up to 90°

*C. 2″ Wide x 4″ Deep
Cope Tooling
Notch 2″ Wide x 4″ Deep

*Interchangeable Tooling

Maximum Material 4″ x 4″ x 1/4″ Angle 4″ x 1/4″ Flat Stock

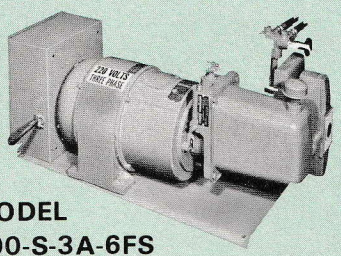

MODEL 600-S-3A-6FS HYDRAULIC POWER UNIT

This rugged-duty hydraulic power unit is performance matched for use with the 606-B Shear and 610-C Coper-Notcher-Bender combination. It has a field-proven record of dependable operation and built-in overload protection. It is a 3 hp, 1500 psi power unit with solenoid operated control valve and manual starter. The control valve is actuated with a double guarded footswitch on 10' electrical cord. A manual selector valve is provided to allow selective operation of either the Shear or the Coper-Notcher-Bender.

MODEL 720 PORTABLE PRESS

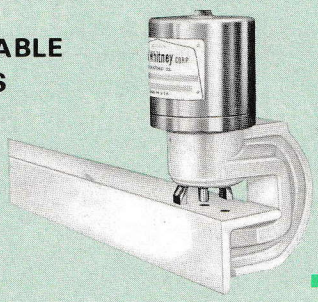

W. A. Whitney Portable Presses provide great versatility for many punching applications in steel and also non-ferrous materials. A rocker-type switch permits the operator to inch or jog the ram down to a precise location as required. Standard #720 style punches and dies are self-aligning and one each of the following sizes is included: 1/8", 3/16", 1/4", 5/16", 3/8", 7/16", 1/2", 9/16", 5/8", 11/16", 3/4" and 13/16". Maximum hole capacity: 13/16" diameter hole thru 1/4" ASTM-A36 steel.

MODEL 700-T-1/2A PORTABLE POWER UNIT

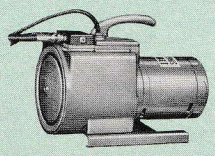

This fixed displacement power unit is recommended for use with all presses up through 30 tons capacity. It is ideal for single hole punching where it is necessary to jog or inch the punch down for locating to a center punch mark. With this type of power unit, the oil is delivered at a fixed rate regardless of the operating pressure. This means that the ram on the press will travel at the same speed throughout the entire punching cycle. This lightweight power unit weighs only 15 pounds, is built to rigid specifications and will offer trouble-free operation when operated and maintained in the normal manner.

Mobile Fabricator (cont'd.)

FORM

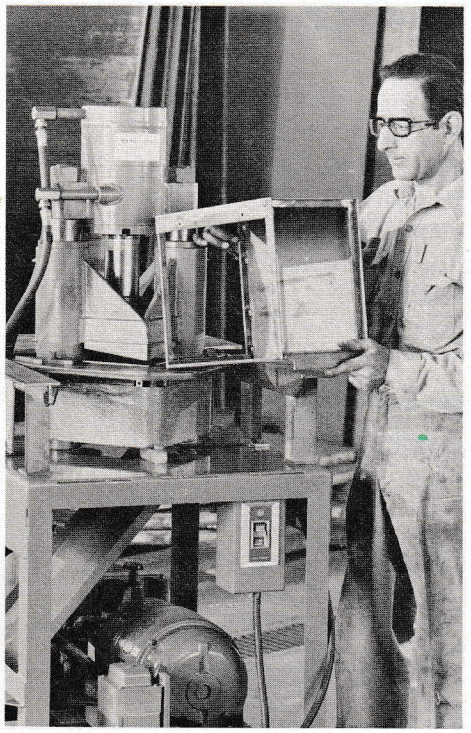

SHEAR

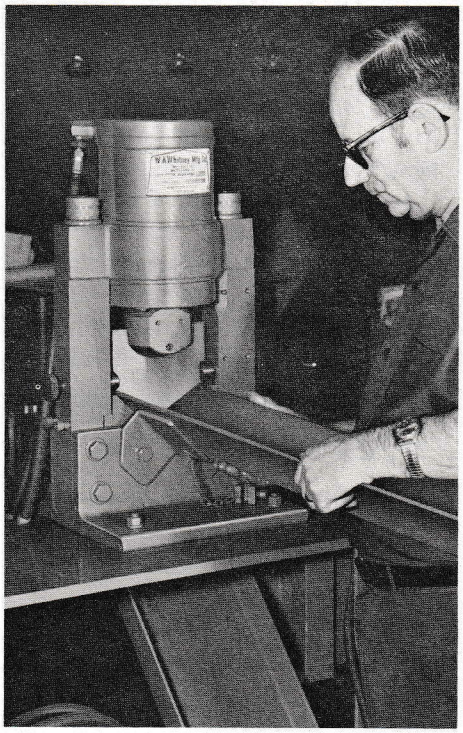

PUNCH

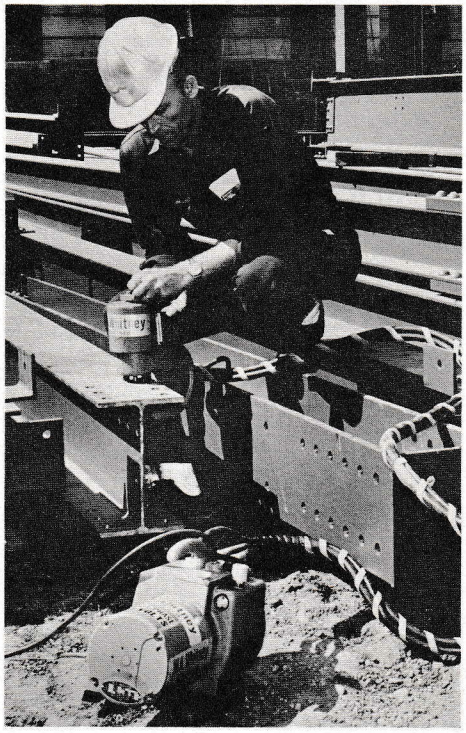

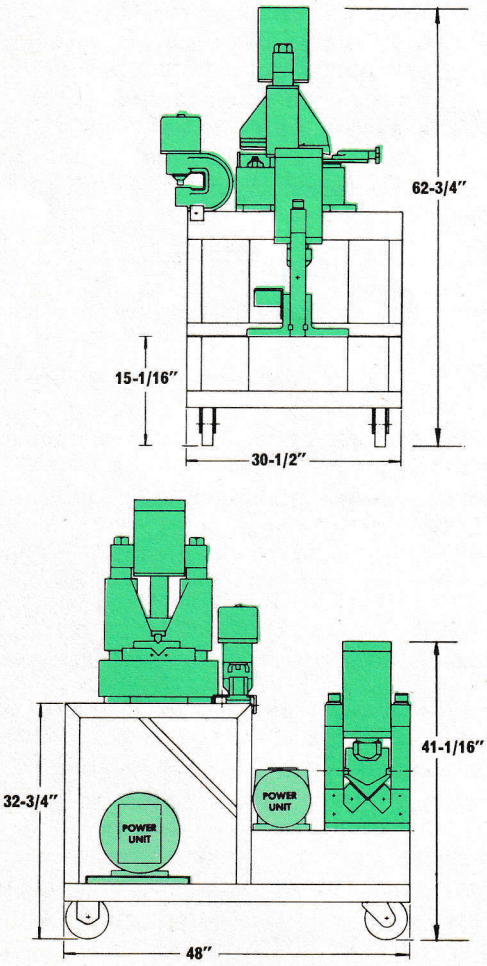

The complete Mobile Fabricator package includes a 606-B Shear with a double cut angle iron die assembly; a 610-C Coper-Notcher-Bender Press with worktable assembly, 90° notching and 90° forming tooling assemblies; a 600-S-3A-6FS Hydraulic Power Unit with 6' long hoses and a double guarded footswitch on 10' cord; a 720 Portable Hydraulic Press with an adjustable ring type stripper, a standard coupling nut, a split coupling nut and twelve #720 style round punch and die sets; a 700-T-1/2A Hydraulic Power Unit with 8' long hose and control wire assembly; and a portable carrier cart.

SPECIFICATIONS	606-B Hydraulic Shear	610-C Coper-Notcher-Bender	720 Portable Press
Tonnage	18 tons	18 tons	20 tons
Stroke	1-13/16"	1-3/8"	7/8"
Stroke Range	3/8" - 1-13/16"	3/8" - 1-3/8"	1/8" - 7/8"
Strokes per minute	10	12	6
Cycle Time	2 to 6 seconds	2 to 6 seconds	9.3 seconds
Operating Pressure	1500 psi	1500 psi	5000 psi
Height	26"	30"	10 5/8"
Net Weight	251 lbs.	450 lbs.	36 lbs.
Distance between columns	7"	—	—
Width of die cavity	2"	—	—
Blade thickness	3/8"	—	—
Std. Clearance	—	.015-.020	—
Throat Depth	—	—	2-1/4"
Recommended Power Unit	600-S-3A-6FS		700-T-1/2 A

Low-Cost Combination Fabricator

Shear, Cope, Notch, Mitre, Reverse Mitre, Bend and Form at 1/4 Cost of Conventional Methods

- Reduce cut-off costs up to 90%
- No burrs
- No deformation
- Long tool life
- No clamping of material required
- Shockless full hydraulic power
- Low initial cost, low tooling costs

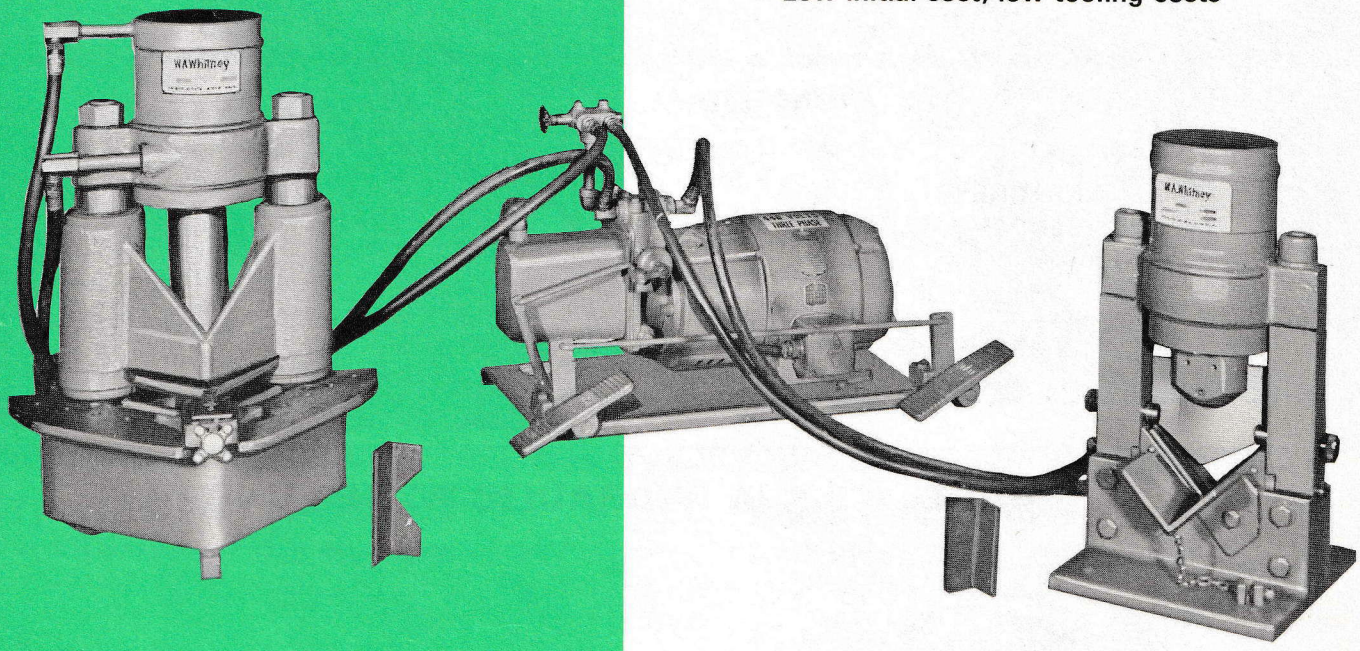

Ideal for

Plant Maintenance Shops

Steel Warehouses

Fabricating Shops

Welding Shops

Sign Shops

This low-cost system incorporating the 606-B Hydraulic Shear, 610-C Coper-Notcher-Bender and 600-F-3A Power Unit is ideal for the steel fabricator who must shear, notch, cope and form angle up to 4" x 4" x 1/4". Operated from a common power source, either fabricating press may be operated independently from the other but not simultaneously. A two-way selector valve is employed for switching from one machine to the other.

This popular combination is widely used by ornamental iron shops, sign companies, plant maintenance departments and is ideally suited for short and production-run applications.

The complete Low-Cost Combination Fabricator package includes a 606-B Shear with a double cut angle iron die assembly; a 610-C Coper-Notcher-Bender Press with 90° notching and 90° forming tooling assemblies; a 600-F-3A Hydraulic Power Unit with dual foot pedal control. 2-way selector valve and two 6′ long hose and control wire assemblies.

Low-Cost Combination Fabricator (cont'd.)

MODEL 606-B HYDRAULIC SHEAR

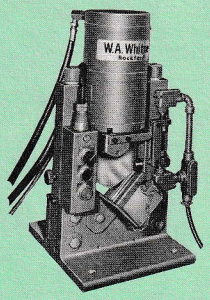

CAPACITIES (Based on ASTM-A36 structural steel—60,000 psi shear strength)

Angle Iron, double cut . . . 4″ x 4″ x 1/4″ max.
Angle Iron, single cut . . . 2″ x 2″ x 1/8″ max.
Flat Stock, double cut . . . 6″ x 5/16″ max.
Flat Stock, single cut . . . 2″ x 5/16″ through 4″ x 5/32″
Round Stock, single cut . . . 7/8″ dia. round or equiv.
90° Forming . . . 1/4″ thick x 6″ wide; 5/16″ thick x 6″ wide
Square Tubing . . . 1″ x 1″—.062 min. wall
Pipe Notching . . . 2″ max. Sched. 40
Solid Square Stock . . . 5/8″ max.

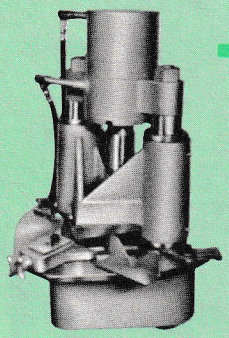

MODEL 610-C COPER-NOTCHER-BENDER

FRONT SIDE:

A. 90° Notching Tooling
Notch 90°—4″ deep
Cope—5-1/2″ x 5-1/2″ deep
Mitre—up to 45°
Reverse Mitre—up to 45°

BACK SIDE:

*B. 90° Bending Tooling
Bend up to 90°

*C. 2″ Wide x 4″ Deep
Cope Tooling
Notch 2″ Wide x 4″ Deep

*Interchangeable Tooling

Maximum Material 4″ x 4″ x 1/4″ Angle 4″ x 1/4″ Flat Stock

MODEL 600-F-3A HYDRAULIC POWER UNIT

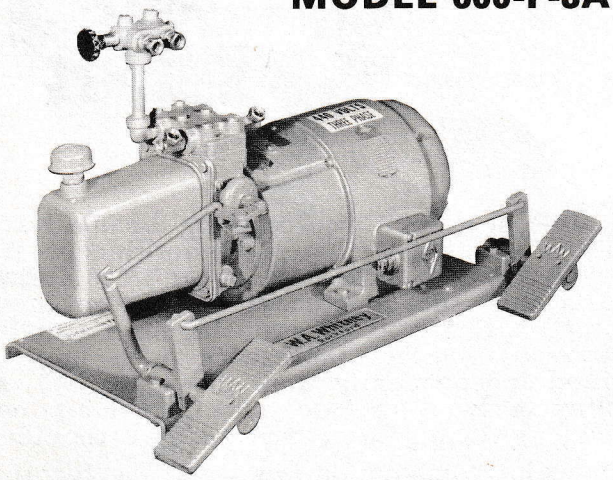

The 600F-3A Hydraulic Power Unit is a 3 hp 1500 psi power unit with a foot controlled valve. When used to operate the Coper-Notcher-Bender and Shear a manual two-way selector valve is installed on the valve. A dual pedal control as illustrated on the Power Unit enables the operator to easily control the Shear or the Coper-Notcher-Bender from either side.

P.S.I. Operating Pressure	1500
Gallons Per Minute 'O' P.S.I. 1500 P.S.I.	3.6 3.0
Reservoir Capacity, Gallons	1
Hydraulic Oil . . . 30° to 150° F. 0° to 150° F.	Mobil DTE 24 Mobil Fluid 200
Oil Filter, Wire Mesh	Built-in
Valving	1/4″ Solenoid
Drip-proof Motor, 1800 R.P.M., 230/460 volt, 60 hz, single-end shaft, F-2 assembly	3 H.P.
Control Voltage	No Control Circuit
Motor Starter	Manual
Hose has NPT male end with same dimension as I.D., maximum 20′ long	3/8″ I.D.
Dimensions, width, depth, height	30-1/4 x 14-1/2 x 13-1/8″
Net weight	225 lbs.

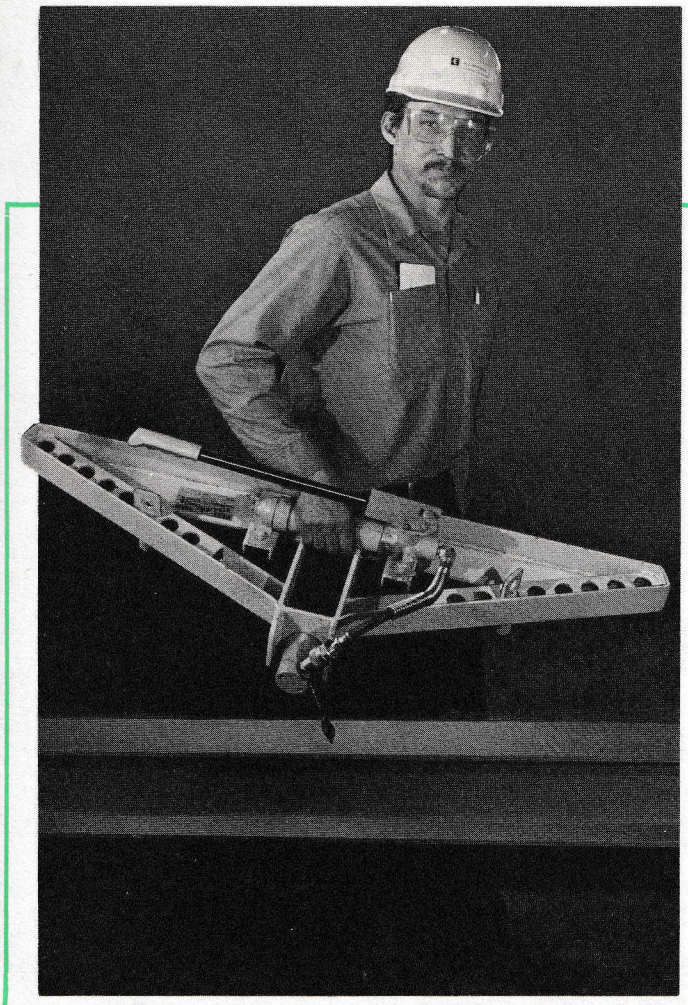

Model 8600 Portable Beam Straightenor

- Straighten beams, channels, angles
- Salvage bent structurals
- Hand carried
- Supplements the structural bulldozer
- No heat marks

The Model 8600 Beam Straightenor is the ideal tool for straightening light-weight structural shapes, beam sections, channel door jambs and many other parts. The tool weighs 70 pounds and is light enough to be hand carried to the work in the shop, yard, or at the erection site.

NOTE: The Beam Straightenor is designed to straighten flanges (removing sweep) of beams and channels and is not designed to remove camber.

STRAIGHTEN CHANNELS

All standard size channels

STRAIGHTEN ANGLE IRON

All sizes to 7 x 4 x ½

STRAIGHTEN BEAMS

All beam sizes 3″ to 7″; plus
all 8″ beams to 31#,
all 10″ beams to 29#,
all 12″ beams to 36#,
all 14″ beams to 38#, and
all 16″ beams to 40#

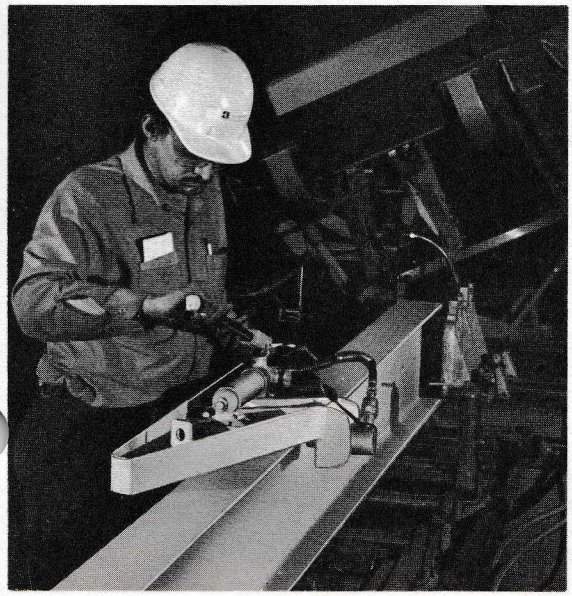

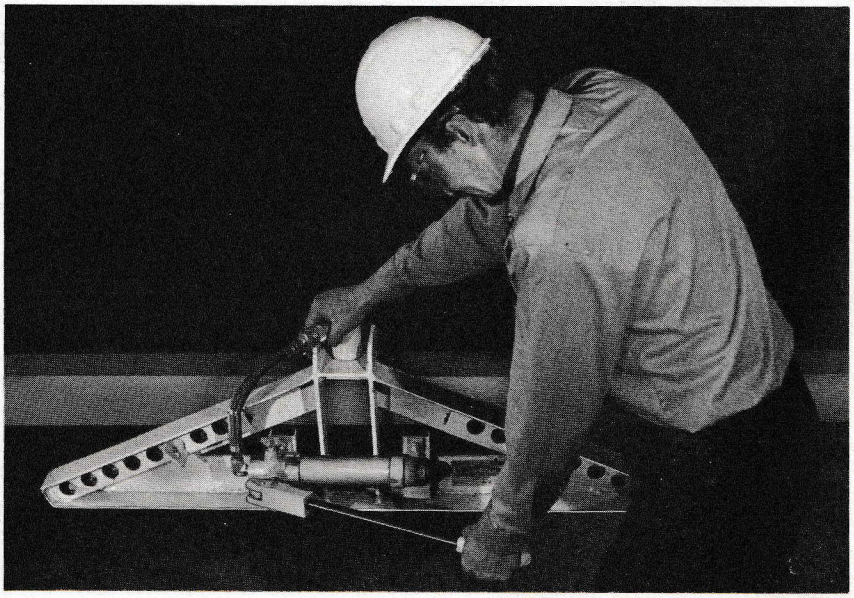

INSIDE REAR COVER

The Fabricating Experts

Founded in 1907, W. A. Whitney Corp. is a rapidly expanding company engaged in the manufacture of high performance metal fabricating equipment for use on both thin sheet and heavy structural metals.

W. A. Whitney Corp. manufacturing facilities employ the latest engineering techniques with a strong emphasis on "quality control". Add to this a wealth of technical experience and know-how and you have a guarantee of uniform, high-quality, competitively priced products . . . everytime.

Hand Tools, Punches and Dies
Punch & Die Division
W. A. WHITNEY CORP.
700 South Main Street
Rockford, Illinois 61105
Phone 815/964-6771 Telex 257-317

Hydraulic Equipment
W. A. WHITNEY CORP.
650 Race Street
Rockford, Illinois 61105
Phone 815/964-6771 Telex 25-7323

W.A.WHITNEY

AN ESTERLINE COMPANY

W.A. WHITNEY OF LOS ANGELES, INC.
2650 S. Myrtle Ave.
Monrovia, California 91016
Phone 213/445-5363 Telex 18-2185

W.A. WHITNEY OF CANADA, Ltd.
50 Paxman Road, Etobicoke
Ontario, Canada M9C 1B7
Phone 416/622-1160; Telex 06-967741

ASESORAMIENTO TECNICO INDUSTRIAL, S.A.
Apartado Postal 306
Tlalnepantla, Mex. Mexico
Phone 905/562-7622

WHITNEY ITALIA, S.p.A.
Strada Del Francese 130/9
10156 Torino Italia
Phone 4702702; Telex 220169

10/80-10M-SLP

Printed in U.S.A.